ORDER NO. DSC1605004CE
B26

Service Manual

Digital Camera/Body/Lens Kit/Double Zoom Lens Kit

Model No. DMC-GX80EB
DMC-GX80EC
DMC-GX80EE
DMC-GX80EF
DMC-GX80EG
DMC-GX80KEB
DMC-GX80KEC
DMC-GX80KEE
DMC-GX80KEF
DMC-GX80KEG
DMC-GX80WEB
DMC-GX80WEF
DMC-GX80WEG
DMC-GX80CEC
DMC-GX80HEC
DMC-GX80HEF
DMC-GX80HEG
DMC-GX85P
DMC-GX85PP
DMC-GX85GC
DMC-GX85GD
DMC-GX85GH
DMC-GX85GK
DMC-GX85GN

Panasonic

© Panasonic Corporation 2016 Unauthorized copying and distribution is a violation of law.

DMC-GX85GT
DMC-GX85KP
DMC-GX85KPP
DMC-GX85KGC
DMC-GX85KGD
DMC-GX85KGH
DMC-GX85KGN
DMC-GX85WGK
DMC-GX85CGC
DMC-GX85CGK

Colour

[DMC-GX80/GX85]
(K).....Black Type
(S).....Silver Type (except EE)
(T).....Brown Type (except EE/EF/P/PP/GN)
[DMC-GX80K/GX85K]
(K).....Black Type
(S).....Silver Type (except EE)
(T).....Brown Type (except EE/P/PP/GN)

[DMC-GX80W/GX85W/GX80C/GX85C]
(K).....Black Type
(S).....Silver Type
(T).....Brown Type
[DMC-GX80H]
(K).....Black Type
(S).....Silver Type

DMC-GX80K/GX85K series: Interchangeable Lens (H-FS12032) is bundled.
DMC-GX80W/GX85W series: Interchangeable Lens (H-FS12032/H-FS35100) are bundled.
DMC-GX80C/GX85C series: Interchangeable Lens (H-H020A) is bundled.
DMC-GX80H series: Interchangeable Lens (H-FS14140-KA) is bundled.

⚠ WARNING

This service information is designed for experienced repair technicians only and is not designed for use by the general public.
It does not contain warnings or cautions to advise non-technical individuals of potential dangers in attempting to service a product.
Products powered by electricity should be serviced or repaired only by experienced professional technicians. Any attempt to service or repair the product or products dealt with in this service information by anyone else could result in serious injury or death.

TABLE OF CONTENTS

PAGE

1 Safety Precautions ---------- **4**
1.1. General Guidelines ---------- 4
1.2. Leakage Current Cold Check ---------- 4
1.3. Leakage Current Hot Check (See Figure. 1) ---------- 4
1.4. How to Discharge the E.Capacitor on Flash P.C.B. ---------- 5
2 Warning ---------- **6**
2.1. Prevention of Electrostatic Discharge (ESD) to Electrostatically Sensitive (ES) Devices ---------- 6
2.2. How to Recycle the Lithium Ion Battery (U.S. Only) ---------- 6
2.3. How to Replace the Lithium Battery ---------- 7
3 Service Navigation ---------- **8**
3.1. Introduction ---------- 8
3.2. About service of bundled lenses ---------- 8
3.3. Important Notice ---------- 8
3.4. Service Notes ---------- 14
3.5. General Description About Lead Free Solder (PbF) ---------- 16
3.6. How to Define the Model Suffix (NTSC or PAL Model) ---------- 17
4 Specifications ---------- **22**
4.1. Camera Body ---------- 22
4.2. Lens ---------- 25
5 Location of Controls and Components ---------- **27**
5.1. Camera Body ---------- 27
5.2. Lens ---------- 28
6 Service Mode ---------- **29**
6.1. Error Code Memory Function ---------- 29
7 Troubleshooting Guide ---------- **31**
7.1. Checking Method of Body and Interchangeable Lens ---------- 31
7.2. Wi-Fi Circuit ---------- 35
8 Service Fixture & Tools ---------- **36**
8.1. Service Fixture and Tools ---------- 36
8.2. Clean Box ---------- 38
8.3. When Replacing the Main P.C.B. ---------- 38
8.4. Service Position ---------- 39
9 Disassembly and Assembly Instructions ---------- **40**
9.1. Camera Body Part ---------- 40
9.2. Disassembly and Assembly Procedure for the Lens ---------- 52
10 Measurements and Adjustments ---------- **53**
10.1. Matrix Chart for Replaced Part and Necessary Adjustment ---------- 53
11 Maintenance ---------- **56**
11.1. Notice in External Cleaning ---------- 56
12 Block Diagram ---------- **57**
12.1. Overall Block Diagram ---------- 57
12.2. System Control Block Diagram ---------- 58
12.3. Video/Audio Process(1) Block Diagram ---------- 59
12.4. Video/Audio Process(2) Block Diagram ---------- 60
12.5. Gyro/WiFi Block Diagram ---------- 61
12.6. Flash/Hot Shoe Block Diagram ---------- 62
12.7. Lens Block Diagram ---------- 63
12.8. Power(1) Block Diagram ---------- 64
12.9. Power(2) Block Diagram ---------- 65
12.10. Power(3) Block Diagram ---------- 66

PAGE

13 Wiring Connection Diagram ---------- **67**
13.1. Interconnection Diagram ---------- 67
14 Schematic Diagram ---------- **68**
15 Printed Circuit Board ---------- **68**
16 Exploded View and Replacement Parts List ---------- **68**

1 Safety Precautions

1.1. General Guidelines

1. **IMPORTANT SAFETY NOTICE**
   There are special components used in this equipment which are important for safety. These parts are marked by

   ⚠ in the Schematic Diagrams, Circuit Board Layout, Exploded Views and Replacement Parts List. It is essential that these critical parts should be replaced with manufacturer's specified parts to prevent X-RADIATION, shock, fire, or other hazards. Do not modify the original design without permission of manufacturer.
2. An Isolation Transformer should always be used during the servicing of AC Adaptor whose chassis is not isolated from the AC power line. Use a transformer of adequate power rating as this protects the technician from accidents resulting in personal injury from electrical shocks. It will also protect AC Adaptor from being damaged by accidental shorting that may occur during servicing.
3. When servicing, observe the original lead dress. If a short circuit is found, replace all parts which have been overheated or damaged by the short circuit.
4. After servicing, see to it that all the protective devices such as insulation barriers, insulation papers shields are properly installed.
5. After servicing, make the following leakage current checks to prevent the customer from being exposed to shock hazards.

1.2. Leakage Current Cold Check

1. Unplug the AC cord and connect a jumper between the two prongs on the plug.
2. Measure the resistance value, with an ohmmeter, between the jumpered AC plug and each exposed metallic cabinet part on the equipment such as screwheads, connectors, control shafts, etc. When the exposed metallic part has a return path to the chassis, the reading should be between 1 MΩ and 5.2 MΩ. When the exposed metal does not have a return path to the chassis, the reading must be infinity.

1.3. Leakage Current Hot Check (See Figure. 1)

1. Plug the AC cord directly into the AC outlet. Do not use an isolation transformer for this check.
2. Connect a 1.5 kΩ, 10 W resistor, in parallel with a 0.15 μF capacitor, between each exposed metallic part on the set and a good earth ground, as shown in Figure. 1.
3. Use an AC voltmeter, with 1 kΩ/V or more sensitivity, to measure the potential across the resistor.
4. Check each exposed metallic part, and measure the voltage at each point.
5. Reverse the AC plug in the AC outlet and repeat each of the above measurements.
6. The potential at any point should not exceed 0.75 V RMS. A leakage current tester (Simpson Model 229 or equivalent) may be used to make the hot checks, leakage current must not exceed 1/2 mA. In case a measurement is outside of the limits specified, there is a possibility of a shock hazard, and the equipment should be repaired and rechecked before it is returned to the customer.

Hot-Check Circuit

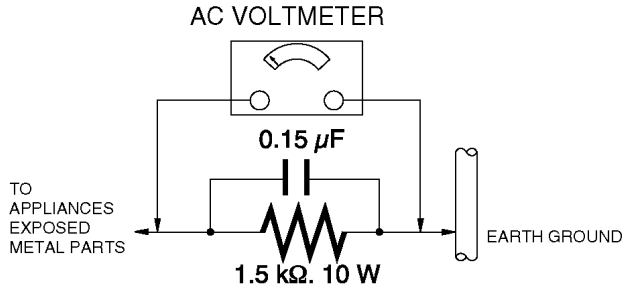

Figure. 1

1.4. How to Discharge the E.Capacitor on Flash P.C.B.

CAUTION:

- **Be sure to discharge the E.Capacitor on Flash P.C.B. before disassembling.**
- **Be careful of the high voltage circuit on Flash P.C.B. when servicing.**

[Discharging Procedure]

1. Remove the Top Case Unit.
2. Put the insulation tube on the lead part of resistor (ERG5SJ102: 1kΩ / 5W).
   (An equivalent type of resistor may be used.)
3. Put the resistor between both terminals of E.Capacitor on the Flash P.C.B. for approx. 5 seconds.
4. After discharging, confirm that the E.Capacitor voltage is lower than 10V by using a voltmeter.

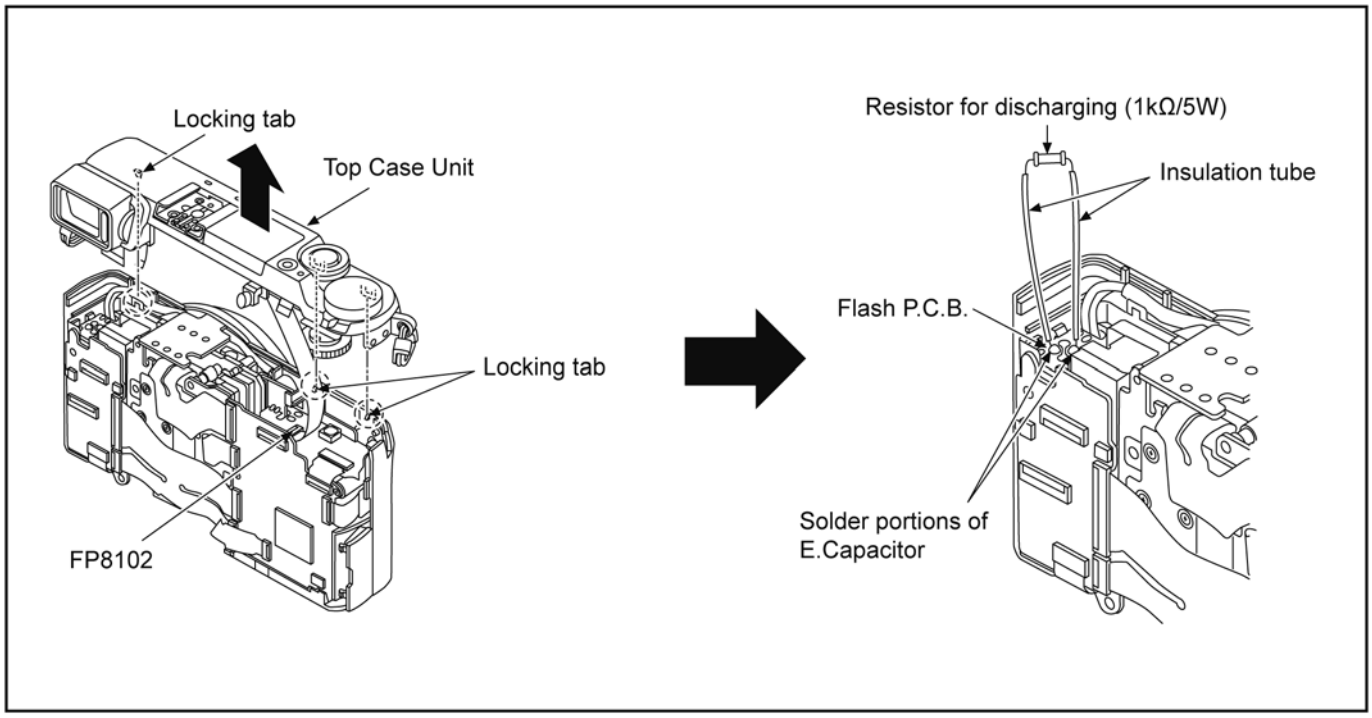

2 Warning

2.1. Prevention of Electrostatic Discharge (ESD) to Electrostatically Sensitive (ES) Devices

Some semiconductor (solid state) devices can be damaged easily by static electricity. Such components commonly are called Electrostatically Sensitive (ES) Devices.

Examples of typical ES devices are IC (integrated circuits) and some field-effect transistors and semiconductor "chip" components.

The following techniques should be used to help reduce the incidence of component damage caused by electrostatic discharge (ESD).

1. Immediately before handling any semiconductor component or semiconductor-equipped assembly, drain off any ESD on your body by touching a known earth ground. Alternatively, obtain and wear a commercially available discharging ESD wrist strap, which should be removed for potential shock reasons prior to applying power to the unit under test.
2. After removing an electrical assembly equipped with ES devices, place the assembly on a conductive surface such as aluminum foil, to prevent electrostatic charge buildup or exposure of the assembly.
3. Use only a grounded-tip soldering iron to solder or unsolder ES devices.
4. Use only an antistatic solder removal device. Some solder removal devices not classified as "antistatic (ESD protected)" can generate electrical charge sufficient to damage ES devices.
5. Do not use freon-propelled chemicals. These can generate electrical charges sufficient to damage ES devices.
6. Do not remove a replacement ES device from its protective package until immediately before you are ready to install it. (Most replacement ES devices are packaged with leads electrically shorted together by conductive foam, aluminum foil or comparable conductive material).
7. Immediately before removing the protective material from the leads of a replacement ES device, touch the protective material to the chassis or circuit assembly into which the device will be installed.
   CAUTION :
   Be sure no power is applied to the chassis or circuit, and observe all other safety precautions.
8. Minimize bodily motions when handling unpackaged replacement ES devices. (Otherwise harmless motion such as the brushing together of your clothes fabric or the lifting of your foot from a carpeted floor can generate static electricity (ESD) sufficient to damage an ES device).

2.2. How to Recycle the Lithium Ion Battery (U.S. Only)

ENGLISH

A lithium ion battery that is recyclable powers the product you have purchased. Please call 1-800-8-BATTERY for information on how to recycle this battery.

FRANÇAIS

L'appareil que vous vous êtes procuré est alimenté par une batterie au lithium-ion recyclable. Pour des renseignements sur le recyclage de la batterie, veuillez composer le 1-800-8-BATTERY.

2.3. How to Replace the Lithium Battery

2.3.1. Replacement Procedure

1. Remove the TOP P.C.B.. (Refer to Disassembly Procedures.)
2. Unsolder the each soldering point of electric lead terminal for Lithium battery (Ref. No. “B7001” at component side of TOP P.C.B.) and remove the Lithium battery together with electric lead terminal. Then replace it into new one.

   NOTE:

   The Lithium battery includes electric lead terminals.

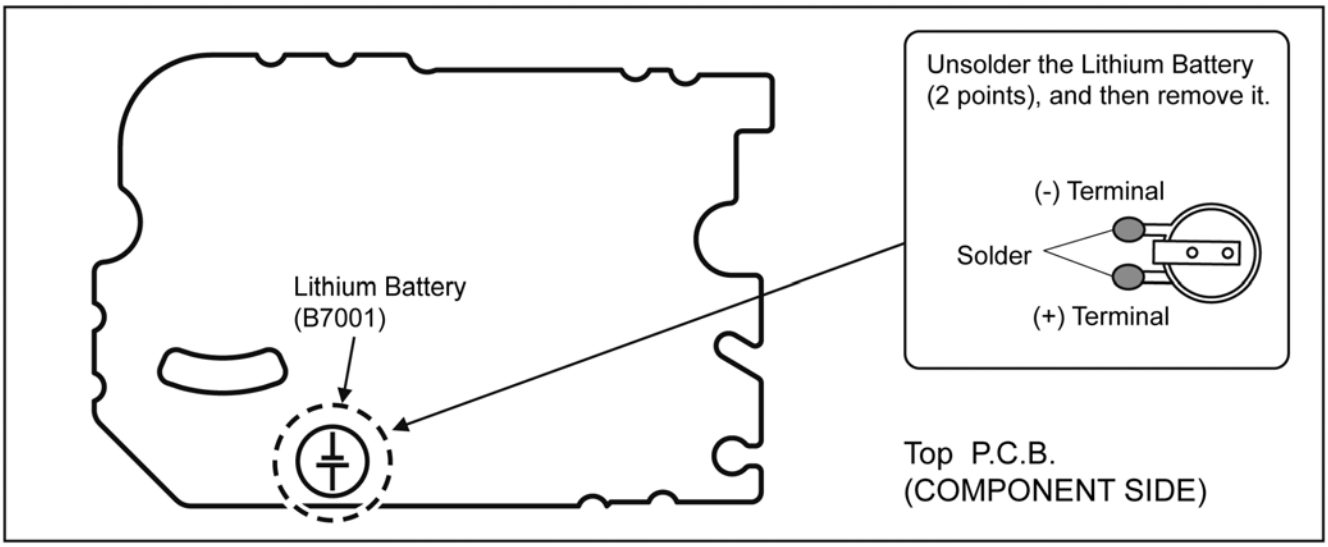

NOTE:

This Lithium battery is a critical component.
It must never be subjected to excessive heat or discharge.
It must therefore only be fitted in requirement designed specifically for its use.
Replacement batteries must be of same type and manufacture.
They must be fitted in the same manner and location as the original battery, with the correct polarity contacts observed.
Do not attempt to re-charge the old battery or re-use it for any other purpose.
It should be disposed of in waste products destined for burial rather than incineration.

(For English)

CAUTION

Danger of explosion if battery is incorrectly replaced.
Replace only with the same or equivalent type recommended by the manufacturer.
Dispose of used batteries according to the manufacturer's instructions.

(For German)

ACHTUNG

Explosionsgefahr bei falschem Anbringen der Batterie. Ersetzen Sie nur mit einem äquivalentem vom Hersteller empfohlenem Typ.
Behandeln Sie gebrauchte Batterien nach den Anweisungen des Herstellers.

(For French)

MISE EN GARDE

Une batterie de remplacement inappropriée peut exploser. Ne remplacez qu’avec une batterie identique ou d’un type recommandé par le fabricant. L’élimination des batteries usées doit être faite conformément aux instructions du manufacturier.

NOTE:

Above caution is applicable for a battery pack which is for DMC-GX80/GX85/GX80K/GX85K/GX80W/GX85W/GX80C/GX85C/GX80H series, as well.

3 Service Navigation

3.1. Introduction

This service manual contains technical information, which allow service personnel's to understand and service this model.
Please place orders using the parts list and not the drawing reference numbers.
If the circuit is changed or modified, the information will be followed by service manual to be controlled with original service manual.

3.2. About service of bundled lenses

Please refer to the following service manuals about Disassembly and Assembly or Maintenance of bundled lenses.

- H-FS12032PP/E/GK: Order No.DSC1311036CE
- H-FS35100PP/E/GK: Order No.DSC1410024CE
- H-H020APP/E/GK: Order No.DSC1307028CE
- H-FS14140PP/E/GK: Order No.DSC1305023CE/DSC1506509SE

3.3. Important Notice

*When servicing, it is recommended dealing with Clean box. (Refer to "8.2. Clean Box" section of this service manual for details.)

3.3.1. Camera Body Unit

3.3.1.1. About Flange back adjustment

When turning the image sensor unit mounting screw even a little or removing, the "simplicity flange back adjustment" is need.
Perform the "simplicity flange back adjustment" according to contents described in "10 Measurement and Adjustment" section of this service manual.

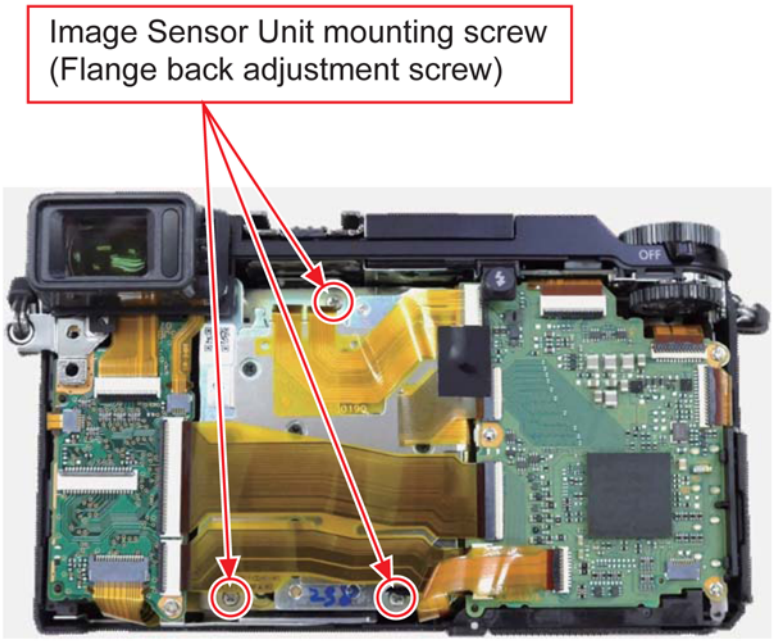

3.3.1.2. About Shutter Unit (Ref. 80)

Before exchanging the "shutter unit", confirm that the symptom and/or phenomenon is not due to the setting of functions.

Important:

After replacing the shutter unit, the shutter unit data has to be stored to the unit.
The shutter unit supplied as service parts has affix the label of own configure data.
By inputting second line to fourth line of these data into the adjustment software and writing these data to Flash-ROM (IC6003), the shutter adjustment becomes needless.
In addition, the adjustment software can read data encoded to QR Code by using WEB camera with a close-up function.
Refer to the adjustment instruction in the adjustment software for details.

3.3.1.3. About Main P.C.B. (Ref.1) & Flash-ROM (IC6003)

Before exchanging the “Main P.C.B.”, confirm that the symptom and/or phenomenon is not due to the setting of functions.

Important:

When cannot be repaired in the IC exchange, and in the case of performing the “Main P.C.B.” exchange, carry out any of following.

In the case of exchanging the Flash-ROM (IC6003) is same way too.

1. When the camera power can be ON, and camera body and adjustment software can be communicated:
   Before replacing the “Main P.C.B. and/or Flash-ROM”, proceed the EEPROM data backup from the unit.
   After replacing the Main P.C.B. and/or Flash-ROM, overwrite the EEPROM data with backup data from the unit first, then proceed the adjustment /inspection. (Almost adjustment/inspection items can be omitted.)
   Refer to the adjustment instruction in the adjustment software for details.
2. When the camera power cannot be ON, or camera body and adjustment software cannot be communicated:
   Almost full adjustment/inspection must be performed after replacing the “Main P.C.B. and/or Flash-ROM”.
   Refer to the adjustment instruction in the adjustment software for details.

Notes after replacement:

Make sure the camera body firmware is latest version.

3.3.1.4. About Venus Engine (IC6001) [Located on the Main P.C.B.]:

- The Venus Engine (IC6001) consists of two IC chips, which are fixed together with solder.
  (The so called, “Package On Package” type IC.)

NOTE:

- During servicing, do not press down hard on the surface of IC6001.

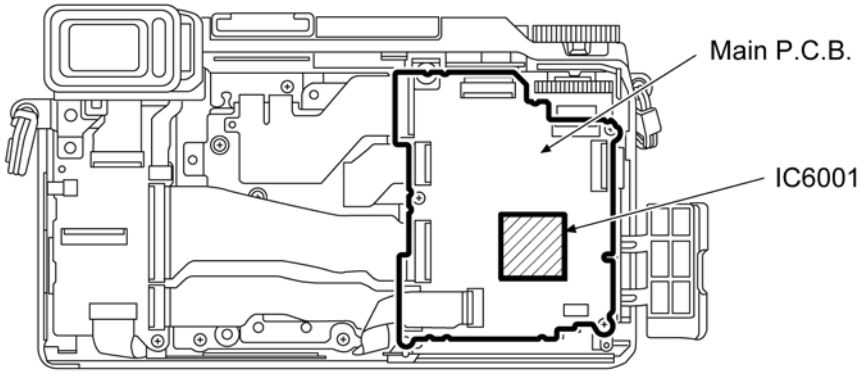

3.3.2. Lens Unit (Interchangeable Lens: H-FS12032)

3.3.2.1. About Lens Main Unit (Ref. 203)

1. Lens Main Unit (Ref. 203) is not supplied due to difficulty of the transportation issue (Fragile, Dust-free packing), and requires critical lens adjustments.
   Therefore, any needs of the “Lens Main Unit” (Ref. 203), carefully confirm its performance in advance.
2. Once “Lens Main Unit” (Ref. 203) is confirmed as defective, place order “Lens Unit” (Ref. 200) and replace Shading Frame (Ref. 208), to maintain Serial number of owner’s original lens.

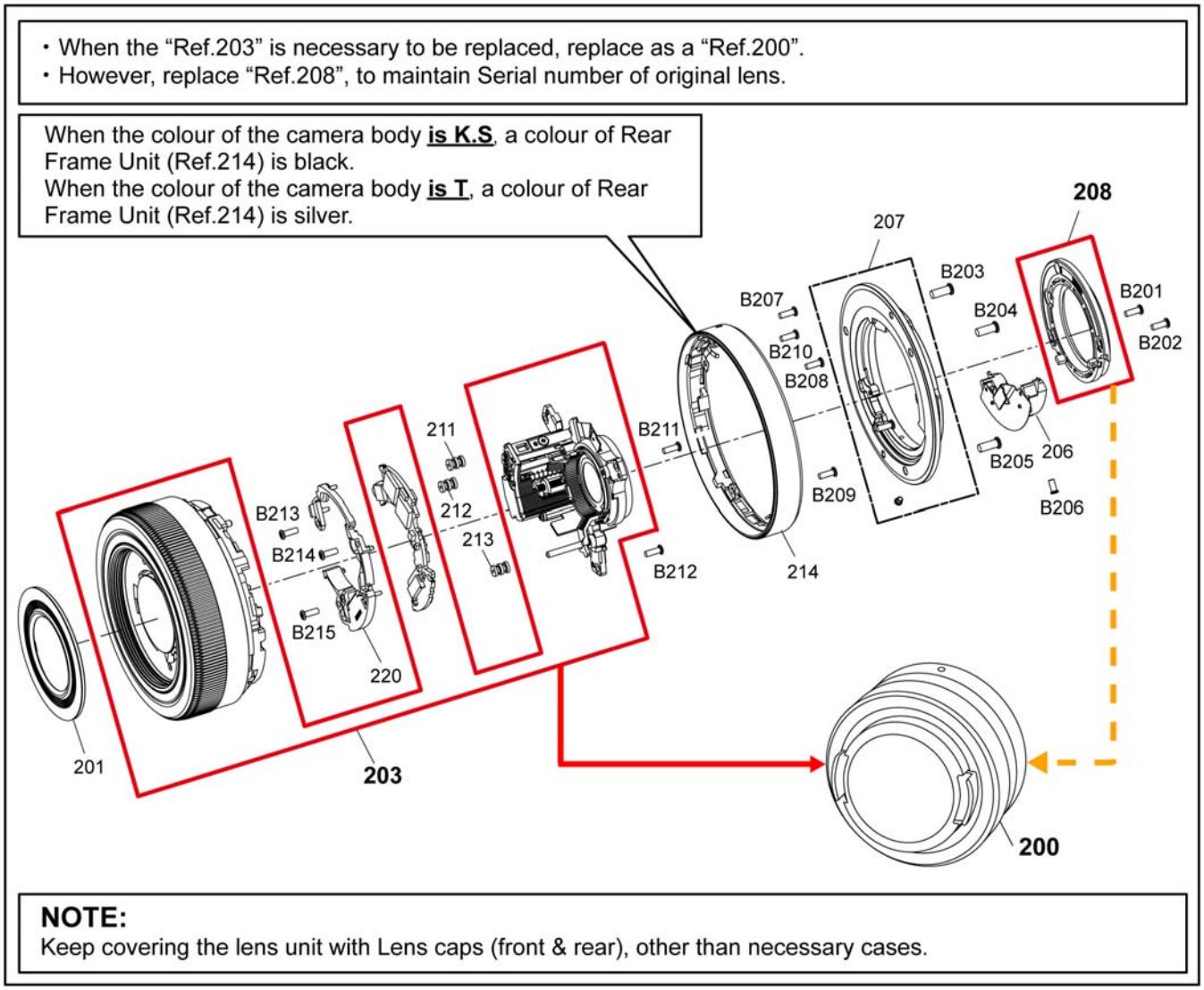

3.3.3. Lens Unit (Interchangeable Lens: H-FS35100)

3.3.3.1. About Lens Main Unit (Ref. 409)

1. Lens Main Unit (Ref. 409) is not supplied due to difficulty of the transportation issue (Fragile, Dust-free packing), and requires critical lens adjustments.
   Therefore, any needs of the “Lens Main Unit” (Ref. 409), carefully confirm its performance in advance.
2. Once “Lens Main Unit” (Ref. 409) is confirmed as defective, place order “Lens Unit” (Ref. 400) and replace Shading Frame (Ref. 402), to maintain Serial number of owner's original lens.

- When the “Ref.409” is necessary to be replaced, replace as a “Ref.400”.
- However, replace “Ref.402”, to maintain Serial number of original lens.

When the colour of the camera body **is K.S**, a colour of Filter Ring (Ref. 401) and Rear Frame Unit (Ref.408) are black.
When the colour of the camera body **is T**, a colour of Filter Ring (Ref. 401) and Rear Frame Unit (Ref.408) are silver.

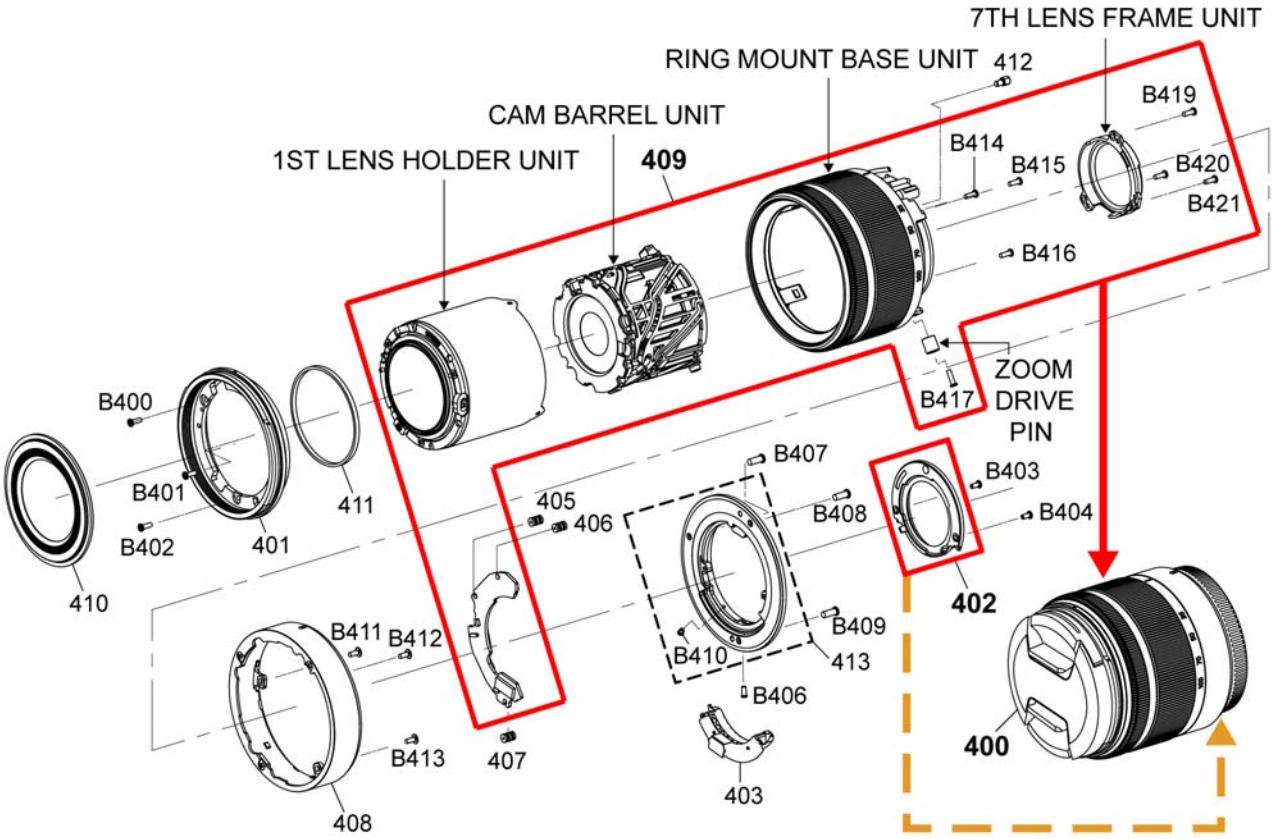

NOTE:
Keep covering the lens unit with Lens caps (front & rear), other than necessary cases.

3.3.4. Lens Unit (Interchangeable Lens: H-H020A)

3.3.4.1. About Lens Main Unit (Ref. 515)

1. Lens Main Unit (Ref. 515) is not supplied due to difficulty of the transportation issue (Fragile, Dust-free packing), and requires critical lens adjustments.
   Therefore, any needs of the “Lens Main Unit” (Ref. 515), carefully confirm its performance in advance.
2. Once “Lens Main Unit” (Ref. 515) is confirmed as defective, place order “Lens Unit” (Ref. 500) and replace Shading Frame (Ref. 503), to maintain Serial number of owner's original lens.

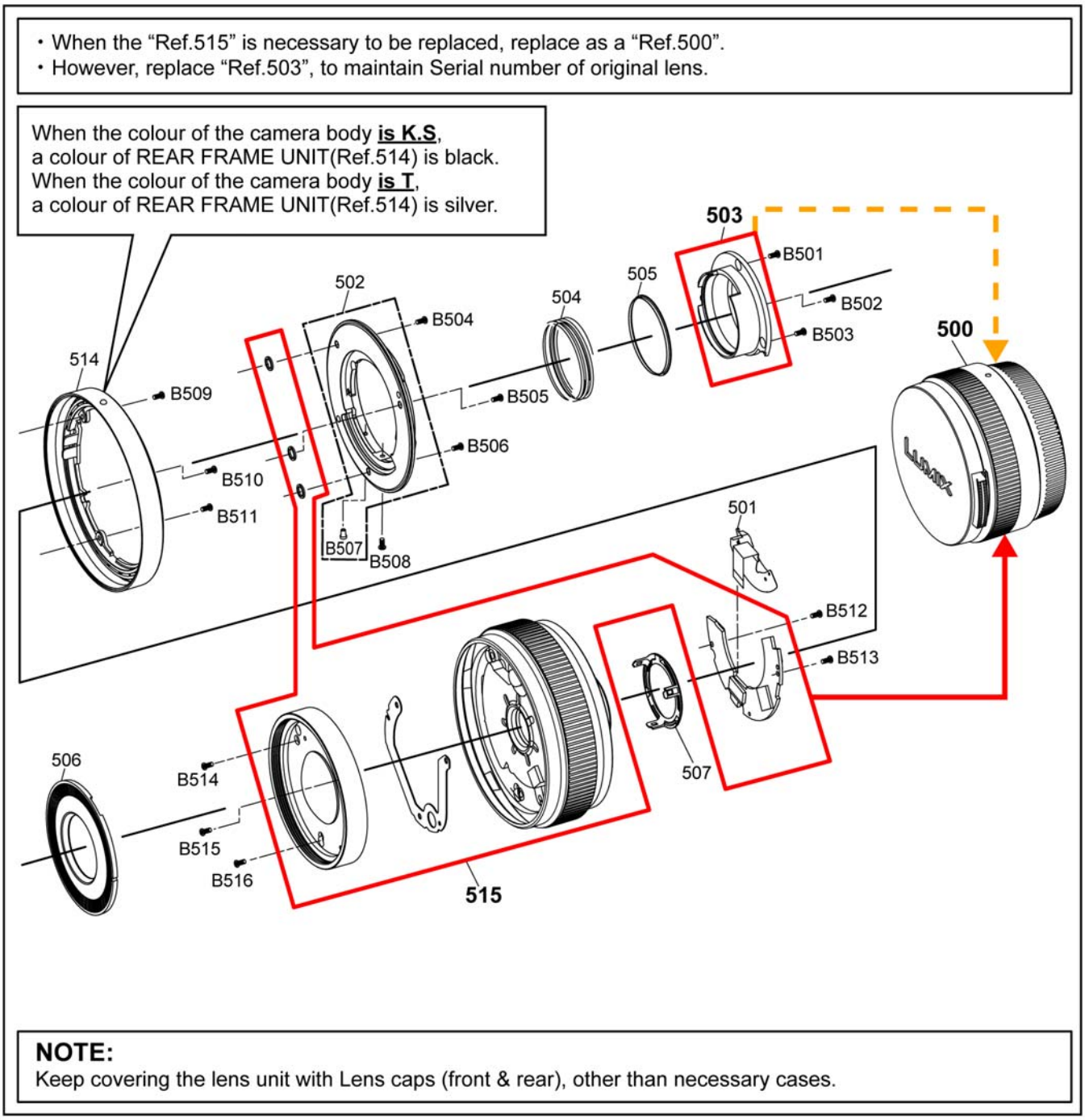

3.3.5. Lens Unit (Interchangeable Lens: H-FS14140)

3.3.5.1. About Lens Main Unit (Ref. 609)

1. Lens Main Unit (Ref. 609) is not supplied due to difficulty of the transportation issue (Fragile, Dust-free packing), and requires critical lens adjustments.
   Therefore, any needs of the “Lens Main Unit” (Ref. 609), carefully confirm its performance in advance.
2. Once “Lens Main Unit” (Ref. 609) is confirmed as defective, place order “Lens Unit” (Ref. 600) and replace Rear Frame Unit (Ref. 608), to maintain Serial number of owner’s original lens.

- When the “Ref.609” is necessary to be replaced, replace as a “Ref.600”.
- However, replace “Ref.602”, to maintain Serial number of original lens.

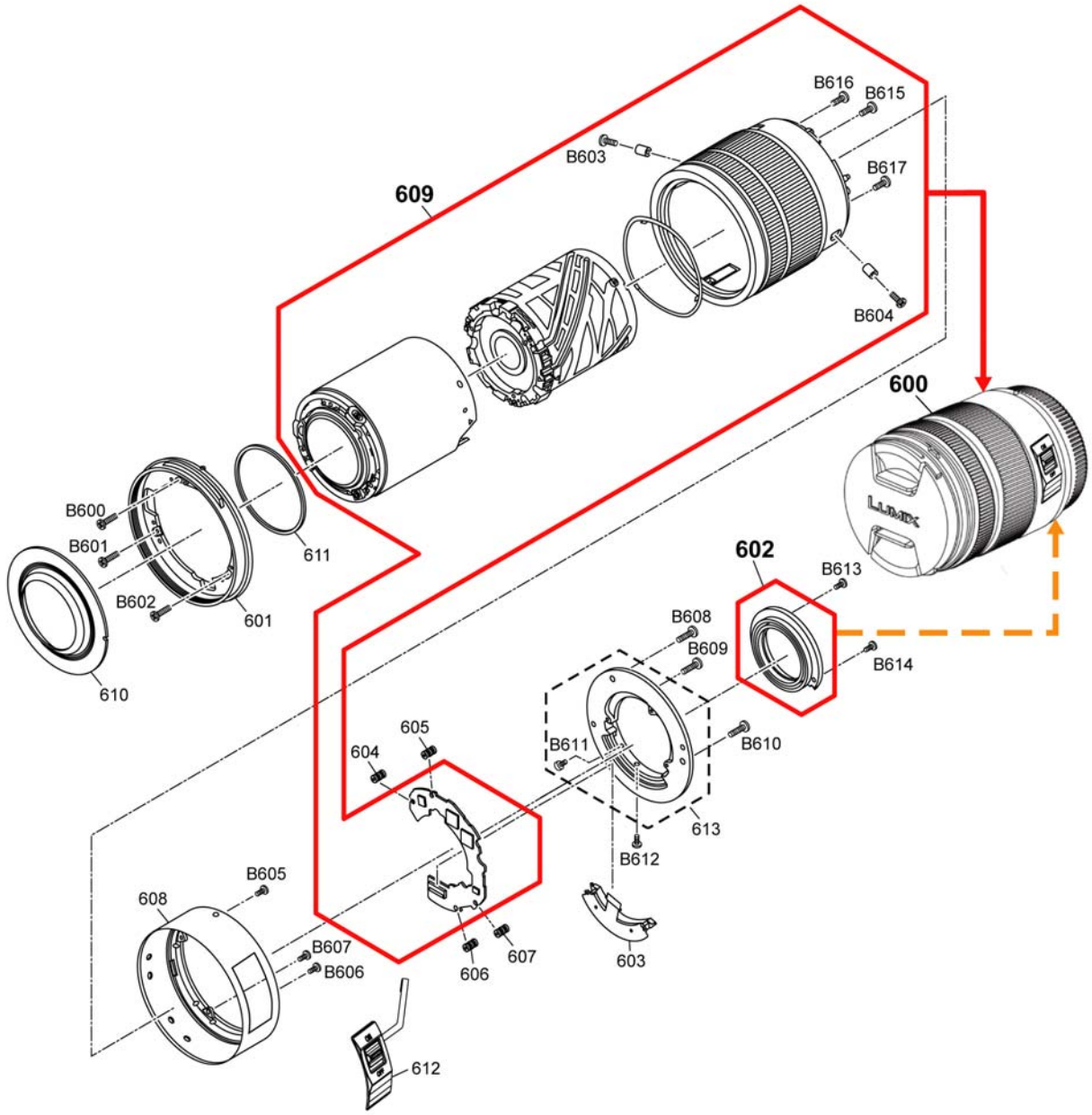

NOTE:
Keep covering the lens unit with Lens caps (front & rear), other than necessary cases.

3.3.6. About Flexible Cable and Connector

Do not touch carelessly so that the foreign body should not adhere to the terminal part of flexible cable and connector.
Wipe off with a clean cloth and the cotton bud, etc. when the terminal part is dirty.

3.4. Service Notes

3.4.1. About Wi-Fi Function

The page number in this chapter does not show the page number of this service manual.

What you can do with the Wi-Fi® function

Controlling with a Smartphone/Tablet (P254)

Recording with a smartphone (P259)
Playing back pictures in the camera (P260)
Saving images stored in the camera (P260)

Sending images in the camera to an SNS (P261)
Writing location information on images stored in the camera (P261)
Combining motion pictures recorded with Snap Movie according to your preference on a smartphone (P263)

Easy connection
You can easily set up a direct connection to your smartphone without entering a password.

Displaying pictures on a TV (P264)

Printing Wirelessly (P270)

When sending images to AV device (P271)
You can send pictures and motion pictures to AV devices in your house (home AV devices).

When sending images to PC (P272)

Using Web services (P274)
You can send pictures and motion pictures to an SNS, etc. via "LUMIX CLUB".
By using [Cloud Sync. Service], you can receive pictures and motion pictures on a PC or smartphone.

These operating instructions refer to both smartphones and tablets as "smartphones" from this point on unless noted otherwise.

3.4.2. Important Notice of Servicing

This camera unit has the personal information of wireless LAN connection the customer has registered.
For the protection of private information, please erase the personal information after the completion of repair by “Initial Settings”.
In addition, please print out the following documents, and pass to the customer with the camera unit.

Printing Material [Leaflet for Customer]

[For The Customer]

Before using your camera please check the Wi-Fi settings.
Depending on what was serviced, the settings may have been reset to the factory defaults.

1. If the settings were reset you will need to reenter your Lumix Club login ID and password.

If you have forgotten the login ID and/or Password, please connect to the Lumix Club web site and create a new ones.

2.You may also have to reenter the settings for your local Wi-Fi network settings.

We recommend consulting the operating manual if you have any questions.

3.5. General Description About Lead Free Solder (PbF)

The lead free solder has been used in the mounting process of all electrical components on the printed circuit boards used for this equipment in considering the globally environmental conservation.

The normal solder is the alloy of tin (Sn) and lead (Pb). On the other hand, the lead free solder is the alloy mainly consists of tin (Sn), silver (Ag) and copper (Cu), and the melting point of the lead free solder is higher approx.30°C (86°F) more than that of the normal solder.

Distinction of P.C.B. Lead Free Solder being used

The letter of "PbF" is printed either foil side or components side on the P.C.B. using the lead free solder.(See right figure)	PbF

Service caution for repair work using Lead Free Solder (PbF)

- The lead free solder has to be used when repairing the equipment for which the lead free solder is used.
  (Definition: The letter of "PbF" is printed on the P.C.B. using the lead free solder.)
- To put lead free solder, it should be well molten and mixed with the original lead free solder.
- Remove the remaining lead free solder on the P.C.B. cleanly for soldering of the new IC.
- Since the melting point of the lead free solder is higher than that of the normal lead solder, it takes the longer time to melt the lead free solder.
- Use the soldering iron (more than 70W) equipped with the temperature control after setting the temperature at 350±30°C (662±86°F).

Recommended Lead Free Solder (Service Parts Route.)

- The following 3 types of lead free solder are available through the service parts route.
  SVKZ000001----------(0.3mm 100g Reel)
  SVKZ000002----------(0.6mm 100g Reel)
  SVKZ000003----------(1.0mm 100g Reel)

Note

* Ingredient: Tin (Sn) 96.5%, Silver (Ag) 3.0%, Copper (Cu) 0.5%. (Flux cored)

3.6. How to Define the Model Suffix (NTSC or PAL Model)

There are nine kinds of DMC-GX7MK2/GX80/GX85 (Camera body unit), regardless of the colours.

- a) DMC-GX7MK2 (Japan domestic model)
- b) DMC-GX85P/PP
- c) DMC-GX80EB/EC/EF/EG
- d) DMC-GX80EE
- e) DMC-GX85GN
- f) DMC-GX85GD
- g) DMC-GX85GT
- h) DMC-GX85GK
- i) DMC-GX85GC/GH

What is the difference is that the “Initial Settings” data which is stored in Flash-ROM mounted on Main P.C.B..

3.6.1. Defining Methods:

To define the model suffix to be serviced, refer to the nameplate which is putted on the bottom side of the unit.

a) DMC-GX7MK2 (Japan domestic model)

The nameplate for this model shows the following Safety registration mark.

b) DMC-GX85P/PP

The nameplate for these models show the following Safety registration mark.

c) DMC-GX80EB/EC/EF/EG

The nameplate for these models show the following Safety registration mark.

d) DMC-GX80EE

The nameplate for this model shows the following Safety registration mark.

e) DMC-GX85GN

The nameplate for this model shows the following Safety registration mark.

f) DMC-GX85GD

The nameplate for this model shows the following Safety registration mark.

g) DMC-GX85GT

The nameplate for this model shows the following Safety registration mark.

h) DMC-GX85GK

The nameplate for this model shows the following Safety registration mark.

i) DMC-GX85GC/GH

The nameplate for these models do not show any above Safety registration mark.

NOTE:

After replacing the Main P.C.B., be sure to achieve adjustment.
Refer to the adjustment instruction in the adjustment software for details.

3.6.2. Initial Settings:

After replacing the Main P.C.B. and/or Flash-ROM, make sure to perform the initial settings after achieving the adjustment by ordering the following procedure in accordance with model suffix of the unit.

1. Important Notice:

Before proceeding Initial settings, make sure to read the following CAUTION.

CAUTION:(Initial Settings)

---After Replacing the Main P.C.B. and/or Flash-ROM ---

[Except "EB/EC/EF and EG" models]

*. The model suffix can be chosen **JUST ONE TIME.**
(Effective model suffix : "P/PP/GC/GD/GH/GK/GN/GT and JAPAN domestic model")

*. Once one of the model suffix has been chosen, the model suffix lists will not be displayed, thus, it can not be changed.

2. Procedures:

- Precautions: Read the above "CAUTION" carefully.
- Preparation:
  Attach the fully charged Battery, and insert the memory card.
  Confirm that it is not intelligent auto mode [iA] or intelligent auto plus mode [iA+].
  (If the unit is intelligent auto mode [iA] or intelligent auto plus mode [iA+], it does not display the initial setting menu.)

- **Step 1. The temporary cancellation of "Initial Settings":**
  While pressing [Playback] button, [AF/AE LOCK] button and "[RIGHT] of Cursor buttons" simultaneously, turn the Power on.
- **Step 2. The cancellation of "Initial Settings":**
  Press the [Playback] button in order to enter the [Playback] mode.
  Press [AF/AE LOCK] button and "[UP] of Cursor buttons" simultaneously, then turn the power off.

  The LCD displays the " ! " mark before the unit powers down.

- **Step 3. Turn the Power On:**
  Set the mode dial to [P] (Program AE Mode), then turn the power on.

• **Step 4. Display the Initial Settings:**

While pressing [MENU/SET] button and “[RIGHT] of Cursor buttons” simultaneously, turn the power off.
The “Initial Settings” menu is displayed.
There are two kinds of “Initial Settings” menu form as follows:
[CASE 1. After replacing the Main P.C.B. and/or Flash-ROM]
[Except “EB/EC/EF and EG” models : SEP0697AA is used as a Main P.C.B.]
When Main P.C.B. has just been replaced, 11 model suffixes are displayed as follows. (three pages in total)

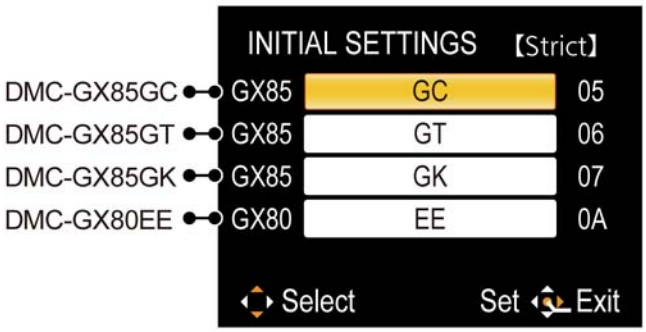

[Only “EB/EC/EF and EG” models : (SEP0697AB is used as a Main P.C.B.)]
When Main P.C.B. has just been replaced, only 4 model suffixes are displayed as follows. (one page in total)
(Do not select GC.)

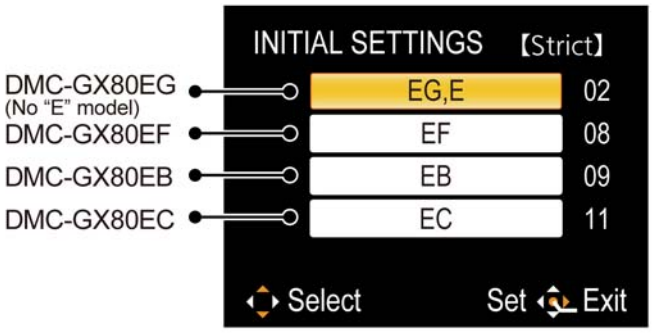

[CASE 2. Other than “After replacing the Main P.C.B. and/or Flash-ROM”]

• **Step 5. Cancel "Strict" mode:**
Press the [DISP.] button to cancel "Strict" mode. (Confirm the "Strict" is disappeared.)

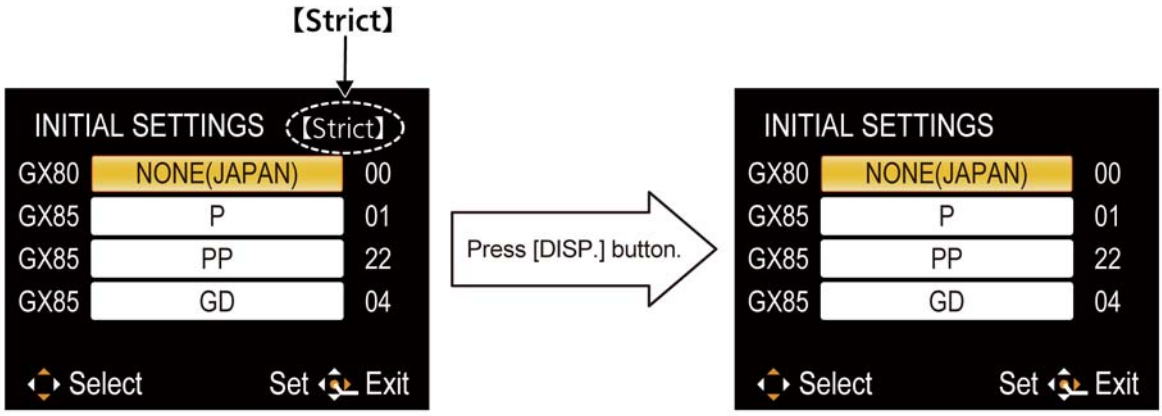

• **Step 6. Choose the Model Suffix in "Initial Settings": (Refer to "CAUTION")**
[Caution: After replacing the Main P.C.B. and/or Flash-ROM]
The model suffix can been chosen, **JUST ONE TIME**.
Once one of the model suffix have been chosen, the model suffix lists will not be displayed, thus, it can not be changed.
Therefore, select the area carefully.
Select the area with pressing "[UP] / [DOWN] of Cursor buttons".

• **Step 7. Set the Model Suffix in "Initial Settings":**
Press the "[RIGHT] of Cursor buttons".
The only set area is displayed, and then press the "[RIGHT] of Cursor buttons" after confirmation.
(The unit is powered off automatically.)

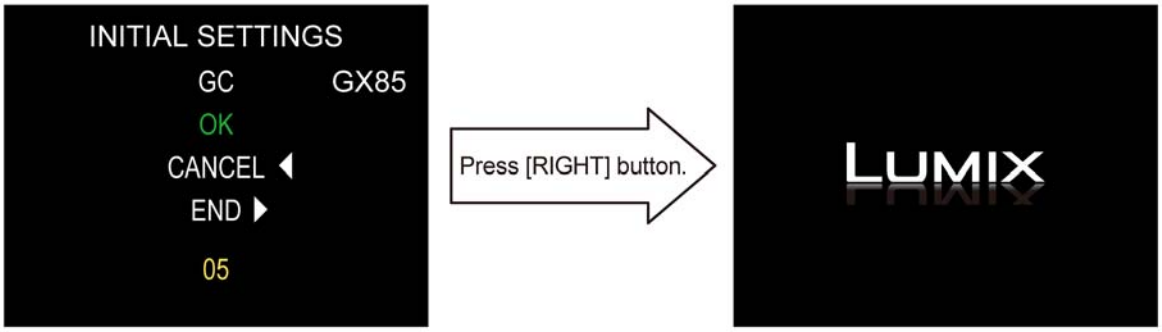

NOTE:
When the error message such as the following is displayed, cancel "Strict" mode.
Press [DISP.] button to clear the "Strict" display at the upper right corner of screen.

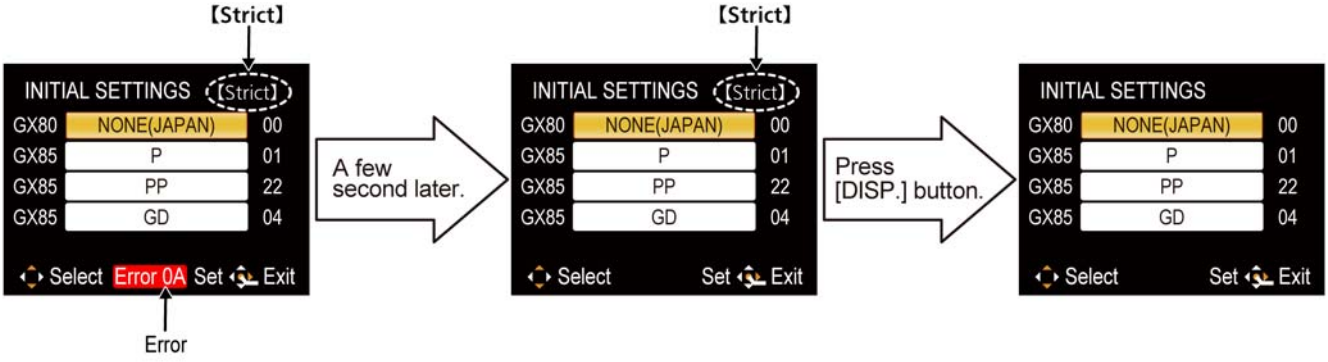

- **Step 8. Confirmation:**
  Confirm the display of “PLEASE SET THE CLOCK” in concerned language when the unit is turned on again.
  When the unit is connected to PC with USB cable, it is detected as removable media.
  (When the “GK” or “GT” model suffix is selected, the display shows “PLEASE SET THE CLOCK” in Chinese.)

As for your reference, major default setting condition is as shown in the following table.

- **Default setting (After “Initial Settings”)**

	MODEL	VIDEO OUTPUT	LANGUAGE	DATE	REMARKS
a)	DMC-GX85P	NTSC	English	Month/Date/Year	
b)	DMC-GX85PP	NTSC	English	Month/Date/Year	
c)	DMC-GX80EB	PAL	English	Date/Month/Year	
d)	DMC-GX80EC	PAL	English	Date/Month/Year	
e)	DMC-GX80EE	PAL	Russian	Date/Month/Year	
f)	DMC-GX80EF	PAL	English	Date/Month/Year	
g)	DMC-GX80EG	PAL	English	Date/Month/Year	
h)	DMC-GX85GC	PAL	English	Date/Month/Year	
i)	DMC-GX85GD	NTSC	Korean	Year/Month/Date	
j)	DMC-GX85GH	PAL	English	Date/Month/Year	
k)	DMC-GX85GK	PAL	Chinese (simplified)	Year/Month/Date	
l)	DMC-GX85GN	PAL	English	Date/Month/Year	
m)	DMC-GX85GT	NTSC	Chinese (traditional)	Year/Month/Date	
n)	DMC-GX7MK2JPC (Japan domestic model)	NTSC/PAL	NTSC/PAL Japanese/ Chinese (simplified)	Year/Month/Date	

4 Specifications

4.1. Camera Body

The following specification is based on DMC-GX80K/DMC-GX80C/DMC-GX80H/DMC-GX80W/DMC-GX80EB.
Some specifications may differ depending on model suffix.

Specifications are subject to change without notice.

Digital Camera Body (DMC-GX80):
Information for your safety

Power Source:	DC 8.4 V (⎓ 8.4 V)
Power Consumption:	2.8 W (When recording with Monitor) [When the Interchangeable lens (H-FS12032) is used] 2.8 W (When recording with Monitor) [When the Interchangeable lens (H-FS35100) is used] 2.9 W (When recording with Monitor) [When the Interchangeable lens (H-H020A) is used] 2.9 W (When recording with Monitor) [When the Interchangeable lens (H-FS14140) is used] 2.1 W (When playing back with Monitor) [When the Interchangeable lens (H-FS12032) is used] 2.1 W (When playing back with Monitor) [When the Interchangeable lens (H-FS35100) is used] 2.3 W (When playing back with Monitor) [When the Interchangeable lens (H-H020A) is used] 2.2 W (When playing back with Monitor) [When the Interchangeable lens (H-FS14140) is used]

Camera effective pixels	16,000,000 pixels
Image sensor	4/3″ Live MOS sensor, total pixel number 16,840,000 pixels, Primary colour filter
Digital Zoom	Max. 4×
Extra Tele Conversion	When taking still pictures: Max. 2× (When a picture size of [S] (4 M), aspect ratio of [4:3] is selected.) When recording motion pictures: 2.4×/3.6×/4.8×
Focus	Auto Focus/Manual Focus, Face/Eye Detection/Tracking/49-area-focusing/Custom Multi/1-area-focusing/Pinpoint (Touch focus area selection possible)
Shutter type	Focal-plane shutter

Burst recording		
Burst speed	Mechanical shutter	8 pictures/second (High speed, AFS), 6 pictures/second (High speed, AFC), 6 pictures/second (Middle speed), 2 pictures/second (Low speed)
	Electronic shutter	40 pictures/second (Super high speed), 10 pictures/second (High speed, AFS), 6 pictures/second (High speed, AFC), 6 pictures/second (Middle speed), 2 pictures/second (Low speed)
Number of recordable pictures	When there are RAW files: 40 or higher pictures When there are no RAW files: 100 or higher pictures ∗ When recording is performed under the test conditions specified by Panasonic	
ISO sensitivity (Standard Output Sensitivity)	AUTO/ISO/100∗/200/400/800/1600/3200/6400/12800/25600 (1/3 EV step change possible) ∗ Only available when [Extended ISO] is set.	
Minimum Illumination	Approx. 9 lx (when i-Low light is used, the shutter speed is 1/25th of a second) [When the Interchangeable lens (H-FS12032) is used] Approx. 12 lx (when i-Low light is used, the shutter speed is 1/25th of a second) [When the Interchangeable lens (H-FS35100) is used] Approx. 5 lx (when i-Low light is used, the shutter speed is 1/25th of a second) [When the Interchangeable lens (H-H020A) is used] Approx. 9 lx (when i-Low light is used, the shutter speed is 1/25th of a second) [When the Interchangeable lens (H-FS14140) is used]	
Shutter speed	Still picture: T (Time) (Max. approx. 120 seconds), 60 seconds to 1/4000th of a second (Mechanical shutter), 1 second to 1/16000th of a second (Electronic shutter) Motion picture: 1/25th of a second to 1/16000th of a second	
Metering range	EV 0 to EV 18	

Picture size		
Still picture	When the aspect ratio setting is [4:3] 4592×3448 pixels, 3232×2424 pixels, 2272×1704 pixels When the aspect ratio setting is [3:2] 4592×3064 pixels, 3232×2160 pixels, 2272×1520 pixels When the aspect ratio setting is [16:9] 4592×2584 pixels, 3840×2160 pixels, 1920×1080 pixels When the aspect ratio setting is [1:1] 3424×3424 pixels, 2416×2416 pixels, 1712×1712 pixels	
Recording quality		
Motion pictures	[AVCHD] 1920×1080 (FHD/50p: 28 Mbps), 50p recording/ 1920×1080 (FHD/50i: 17 Mbps), 50i recording/ 1920×1080 (FHD/25p: 24 Mbps), 50i recording*/ 1920×1080 (FHD/24p: 24 Mbps), 24p recording * Sensor output is 25 frames/sec. [MP4] 3840×2160 (4K/25p: 100 Mbps)/ 3840×2160 (4K/24p: 100 Mbps)/ 1920×1080 (FHD/50p: 28 Mbps)/ 1920×1080 (FHD/25p: 20 Mbps)/ 1280×720 (HD/25p: 10 Mbps)/ 640×480 (VGA/25p: 4 Mbps)	
Quality	RAW/RAW+Fine/RAW+Standard/Fine/Standard/ MPO+Fine/MPO+Standard	
Recording file format		
Still Picture	RAW/JPEG (based on “Design rule for Camera File system”, based on “Exif 2.3” standard, DPOF corresponding)/MPO	
Motion pictures	AVCHD Progressive/AVCHD/MP4	
Audio compression	AVCHD	Dolby® Digital (2 ch)
	MP4	AAC (2 ch)

Interface	
Digital	“USB 2.0” (High Speed) * Data from the PC can not be written to the camera using the USB connection cable.
Terminal	
[CHARGE]	USB 2.0 Micro-B
[HDMI]	micro HDMI Type D
Dimensions	Approx. 122 mm (W)×70.6 mm (H)×43.9 mm (D) [4.80″ (W)×2.78″(H)×1.73″ (D)] (excluding the projecting parts)
Mass	Approx. 426 g/0.94 lb [with the card and battery] Approx. 383 g/0.84 lb (camera body) Approx. 493 g/1.09 lb [with the Interchangeable lens (H-FS12032), card and battery] Approx. 561 g/1.24 lb [with the Interchangeable lens (H-FS35100), card and battery] Approx. 513 g/1.13 lb [with the Interchangeable lens (H-H020A), card and battery] Approx. 691 g/1.52 lb [with the Interchangeable lens (H-FS14140), card and battery]
Operating temperature	0 °C to 40 °C (32 °F to 104 °F)
Operating humidity	10%RH to 80%RH

Wireless transmitter

Compliance standard	IEEE 802.11b/g/n (standard wireless LAN protocol)
Frequency range used (central frequency)	2412 MHz to 2462 MHz (1 to 11ch)
Encryption method	Wi-Fi compliant WPA™/WPA2™
Access method	Infrastructure mode

AC adaptor (Panasonic SAE0012F):
Information for your safety

Input:	110 V – 240 V ∼ 50/60 Hz 0.2 A
Output:	5 V ⎓ 1.0 A

Battery Pack (lithium-ion) (Panasonic DMW-BLG10E):
Information for your safety

Voltage/capacity:	7.2 V/1025 mAh

The symbols on this product (including the accessories) represent the following:

∼	AC
⎓	DC
⧈	Class II equipment (The construction of the product is double-insulated.)

4.2. Lens

Interchangeable Lens	H-FS12032 "LUMIX G VARIO 12–32 mm/F3.5–5.6 ASPH./MEGA O.I.S."	H-FS35100 "LUMIX G VARIO 35–100 mm/F4.0–5.6 ASPH./MEGA O.I.S."
Focal length	f=12 mm to 32 mm (35 mm film camera equivalent: 24 mm to 64 mm)	f=35 mm to 100 mm (35 mm film camera equivalent: 70 mm to 200 mm)
Aperture type	7 diaphragm blades/ circular aperture diaphragm	7 diaphragm blades/ circular aperture diaphragm
Maximum aperture	F3.5 (Wide) to F5.6 (Tele)	F4.0 (Wide) to F5.6 (Tele)
Minimum aperture value	F22	F22
Lens construction	8 elements in 7 groups (3 aspherical lenses, 1 ED lenses)	12 elements in 9 groups (1 aspherical lenses, 2 ED lenses)
In focus distance	0.2 m (0.66 feet) to ∞ (from the focus distance reference line) (focal length 12 mm to 20 mm), 0.3 m (0.98 feet) to ∞ (from the focus distance reference line) (focal length 21 mm to 32 mm)	0.9 m (3.0 feet) to ∞ (from the focus distance reference line)
Maximum image magnification	0.13× (35 mm film camera equivalent: 0.26×)	0.11× (35 mm film camera equivalent: 0.22×)
Optical Image Stabiliser	Available	Available
[O.I.S.] switch	None (Setting of the [Stabilizer] is done in [Rec] menu.)	None (Setting of the [Stabilizer] is done in [Rec] menu.)
Mount	"Micro Four Thirds Mount"	"Micro Four Thirds Mount"
Angle of view	84° (Wide) to 37° (Tele)	34° (Wide) to 12° (Tele)
Filter diameter	37 mm	46 mm
Max. diameter	Approx. 55.5 mm (2.2 inch)	Approx. 55.5 mm (2.2 inch)
Overall length	Approx. 24 mm (0.94 inch) (from the tip of the lens to the base side of the lens mount when the lens barrel is recessed)	Approx. 50 mm (2.0 inch) (from the tip of the lens to the base side of the lens mount when the lens barrel is recessed)
Mass	Approx. 67 g/0.15 lb	Approx. 135 g/0.38 lb

Interchangeable Lens	H-H020A “LUMIX G 20 mm/F1.7 II ASPH.”	H-FS14140 “LUMIX G VARIO 14–140 mm/F3.5–5.6 ASPH./POWER O.I.S.”
Focal length	f=20 mm (35 mm film camera equivalent: 40 mm)	f=14 mm to 140 mm (35 mm film camera equivalent: 28 mm to 280 mm)
Aperture type	7 diaphragm blades/ circular aperture diaphragm	7 diaphragm blades/ circular aperture diaphragm
Maximum aperture	F1.7	F3.5 (Wide) to F5.6 (Tele)
Minimum aperture value	F16	F22
Lens construction	7 elements in 5 groups (2 aspherical lenses)	14 elements in 12 groups (3 aspherical lenses, 2 ED lenses)
In focus distance	0.2 m (0.66 feet) to ∞ (from the focus distance reference line)	0.3 m (0.98 feet) to ∞ (from the focus distance reference line) (focal length 14 mm to 21 mm), 0.5 m (1.6 feet) to ∞ (from the focus distance reference line) (focal length 22 mm to 140 mm)
Maximum image magnification	0.13× (35 mm film camera equivalent: 0.25×)	0.25× (35 mm film camera equivalent: 0.5×)
Optical Image Stabiliser	Not available	Available
[O.I.S.] switch	None	Available (Switching ON/ OFF)
Mount	“Micro Four Thirds Mount”	“Micro Four Thirds Mount”
Angle of view	57°	75° (Wide) to 8.8° (Tele)
Filter diameter	46 mm	58 mm
Max. diameter	Approx. 63 mm (2.5 inch)	Approx. 67 mm (2.6 inch)
Overall length	Approx. 25.5 mm (1.0 inch) (from the tip of the lens to the base side of the lens mount)	Approx. 75 mm (3.0 inch) (from the tip of the lens to the base side of the lens mount)
Mass	Approx. 87 g/0.19 lb	Approx. 265 g/0.58 lb

5 Location of Controls and Components

The following description is for DMC-GX80K/DMC-GX80C/DMC-GX80H/DMC-GX80W/DMC-GX80EB.
Some descriptions may differ depending on model suffix.
The page number in this chapter does not show the page number of this service manual.

5.1. Camera Body

■ **Camera body**

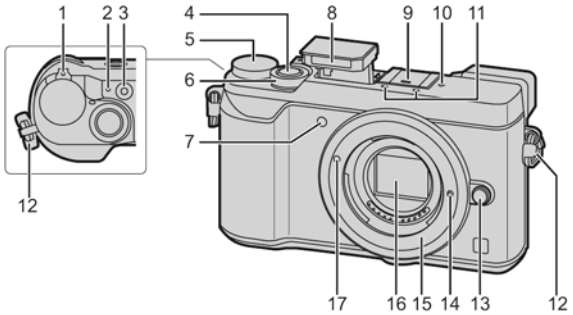

1	Camera ON/OFF switch (P15)
2	Charging lamp (P13)/ Status indicator (P15)/ Wi-Fi® connection lamp (P61)
3	Motion picture button (P43)
4	Shutter button (P18)
5	Mode dial (P24)
6	Front dial (P23)
7	Self-timer indicator/ AF Assist Lamp
8	Flash
9	Hot shoe (Hot shoe cover) • Keep the Hot Shoe Cover out of reach of children to prevent swallowing.

10	Focus distance reference mark
11	Stereo microphone • Be careful not to cover the microphone with your finger. Doing so may make sound difficult to record.
12	Shoulder strap eyelet (P11)
13	Lens release button (P14)
14	Lens lock pin
15	Mount
16	Sensor
17	Lens fitting mark (P14)

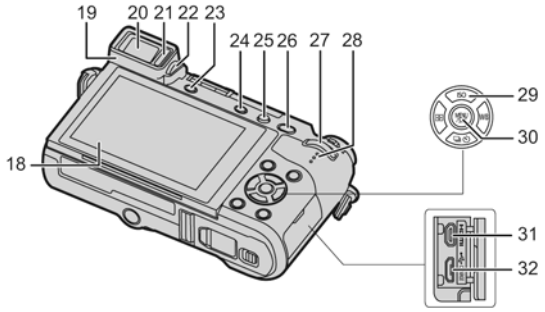

18	Touch screen (P26)/monitor (P68)
19	Eyecup
20	Viewfinder (P25)
21	Eye sensor (P25)
22	Diopter adjustment dial (P16)
23	[LVF] button (P25)/[Fn4] button (P28)
24	[ ] (4K photo mode) button (P33)/ [Fn3] button (P28)
25	Flash open button • The flash opens, and recording with the flash becomes possible.
26	[AF/AE LOCK] button
27	Rear dial (P23)
28	Speaker

29	Cursor buttons (P23) ▲/[ISO] (ISO sensitivity) ►/[WB] (White Balance) ◄/[ ] (Auto Focus Mode) ▼/[ ] (Drive mode) (P38)
30	[MENU/SET] button (P23)
31	[HDMI] socket
32	[CHARGE] socket (P12)

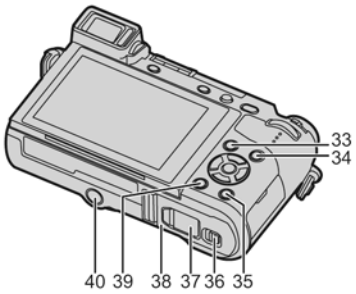

33	[ ] (Post Focus) button (P36)/ [Fn1] button (P28)
34	[▶] (Playback) button (P49)
35	[DISP.] button • Each time this is pressed, the display on the monitor is switched.
36	Release lever (P11)
37	DC coupler cover (P85) • When using an AC adaptor, ensure that the Panasonic DC coupler (DMW-DCC11: optional) and AC adaptor (DMW-AC10E: optional) are used. • Always use a genuine Panasonic AC adaptor (DMW-AC10E: optional). • When using an AC adaptor (optional), use the AC mains lead supplied with the AC adaptor (optional).
38	Card/Battery door (P11)
39	[ ] (Delete) button (P50)/ [Q.MENU/] (Quick Menu/Return) button (P28)/[Fn2] button (P28)
40	Tripod mount • It may not be possible to attach and securely fasten a tripod with a screw length of 5.5 mm (0.22 inch) or more to the camera. Doing so may also damage the camera.

■ **About the function button ([Fn5] to [Fn9])**

• Function buttons ([Fn5] to [Fn9]) (P28) are touch icons. Touch the [ ] tab on the recording screen to display them.

5.2. Lens

■ **Lens**

H-FS12032

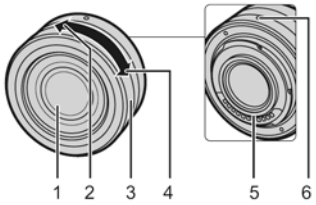

H-FS35100

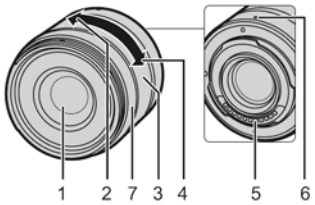

H-H020A

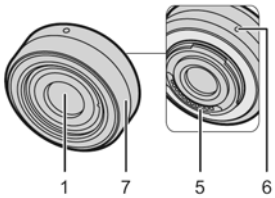

H-FS14140

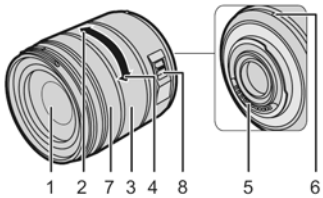

1 Lens surface
2 Tele
3 Zoom ring
4 Wide
5 Contact point
6 Lens fitting mark (P14)
7 Focus ring (P31)
8 [O.I.S.] switch

• When the interchangeable lens (H-H020A) is used, it is not possible to set the Focus Mode to [AFC] or [AFF].

6 Service Mode

6.1. Error Code Memory Function

1. **General Description**

   This unit is equipped with history of error code memory function, and can be memorized 16 error codes in sequence from the latest. When the error is occurred more than 16, the oldest error is overwritten in sequence.
   The error code is not memorized when the power supply is shut down forcibly.
   (i.e., when the unit is powered on by the battery, the battery is pulled out)
   The error code is memorized to Flash-ROM when the unit has just before powered off.

2. **How to Display**

   The error code can be displayed by ordering the following procedure:

   - Preparation
     Attach the fully charged Battery, and insert the memory card.
   - **Step 1. The temporary cancellation of "Initial Settings":**
     While pressing [Playback] button, [AF/AE LOCK] button and "[RIGHT] of Cursor buttons" simultaneously, turn the Power on.
   - **Step 2. Execute the error code display mode:**
     Press [MENU/SET] button, [AF/AE LOCK] button and "[LEFT] of Cursor buttons" simultaneously with the step 1 condition.
     The display is changed as shown below when the above buttons are pressed simultaneously.
     Normal display → Error code display → Camera information display → Normal display → .....

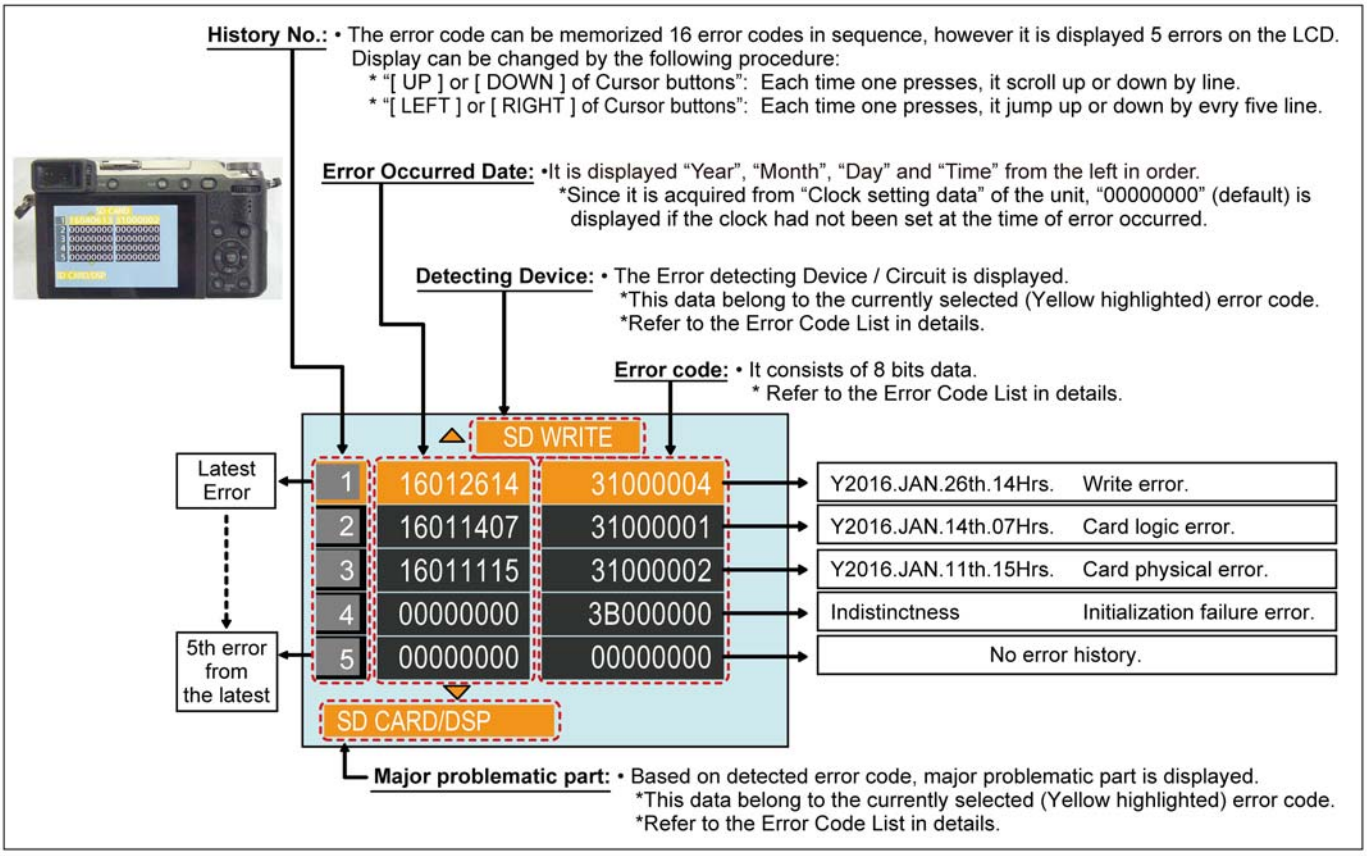

Example of Error Code Display

Error Code List

The error code consists of 8 bit data and it shows the following information.

Attribute	Main item	Sub item	Error code		Contents	Error Indication	
			High 4 bits	Low 4 bits		Detecting device	Problematic Part/Circuit
HARD	Flash	Flash	28*0	0000	Flash charging capacitor did not been fully charged within 20 seconds	STRB CHG	STRB PCB/ FPC
				0001	EEPROM of External Flash is damaged.	EST EEP	E.STRB
				0002	ZOOM function of External Flash is damaged.	EST	
				0003	Other function of External Flash is damaged.		
	BIS	In Body Image Stabilization	28*0	0010	HP High detect error (BIS X axis HP encorder always detects High, and not becomes Low)	BIS HPL X	BIS
				0020	HP Low detect error (BIS X axis HP encorder always detects Low, and not becomes High)	BIS HPH X	
				0030	HP High detect error (BIS Y axis HP encorder always detects High, and not becomes Low)	BIS HPL Y	
				0040	HP Low detect error (BIS Y axis HP encorder always detects Low, and not becomes High)	BIS HPH Y	
				0050	BIS GYRO (X) error	BIS GYRO X	
				0060	BIS GYRO (Y) error	BIS GYRO Y	
				0070	BIS GYRO communication error	BIS GY DIF	
				0080	BIS GYRO (R) error	BIS GYRO R	
				0100	BIS Position sensor (X1) error	BIS POS X1	
				0200	BIS Position sensor (X2) error	BIS POS X2	
				0300	BIS Position sensor (Y) error	BIS POS Y	
				0400	BIS Drive Voltage (X1) error	BIS DRIVE X1	
				0500	BIS Drive Voltage (X2) error	BIS DRIVE X2	
				0600	BIS Drive Voltage (Y) error	BIS DRIVE Y	
				0700	BIS DIFF Signal (X1) error	BIS DIFF X1	
				0800	BIS DIFF Signal (X2) error	BIS DIFF X2	
				0900	BIS DIFF Signal (Y) error	BIS DIFF Y	
	Flash-ROM	Data Area	2B*0	0001	Flash-ROM data reading error is detected when the unit turns ON	FROM RE	FROM
				0002	Flash-ROM data writing error is detected when the unit turns OFF	FROM WR	
		Program Area		0005	Firmware update error	FIRMUP FAIL	
SOFT	CPU	Reset	30*0	0000	System error (NMI reset)	NMI RST	MAIN PCB
	Recording Media	Memory card	31*0	0002	Memory card physical error During formatting the memory card, there is no response from the memory card If the mini-SD memory card is used, check the SD memory card adaptor	SD CARD	SD CARD/DSP
				0004	Memory card writing error Check the memory card. It might be damage one.	SD WRITE	
	Lens	Communication	3C11 | 3CFA	****	Lens communication error	LENS COMM	SOFT
	Camera	System	3B*0	0000	Initialization failure error	FROM	SOFT
			3E*0	0001	Exposure charging operation failure	MSHUT	MSHUT
				0002	Failure of the returning operation to the home position		
				0003	Failure of the mecha shutter sensor		
				0004	Failure of the mecha shutter sensor		
				0005	Failure of the mecha shutter sensor		
				0006	Exposure charging recovery operation failure		
				0011	Failure of the mecha shutter sensor		
				0012	Failure of the mecha shutter sensor		
				0013	Failure of the mecha shutter sensor		
				0014	Abnormal current of shutter drive motor		
	Recording	Motion Image Recording	3F*0	0001	File time out error in recording motion image	MOVR T.O.	SOFT
				0002	File data cue send error in recording motion image	MOVR FILE	
Wi-Fi			3211	**02 | **0C	Wi-Fi related errors: *Generally, above are unable to specified the, which cannot be used for malfunction diagnosis.	WiFi	WiFi

Important Notice about "Error Code List"

About "*" indication:

The third digit from the left is different as follows.

- In case of 0 (example: 2B**0**01000)
  When the third digit from the left shows "0", this error occurred under the condition of Initial Settings has been completed.
  It means that this error is occurred basically at user side.
- In case of 8 (example: 2B**8**01000)
  When the third digit from the left shows "8", this error occurred under the condition of Initial Settings has been released.
  (Example; Factory assembling-line before unit shipment, Service mode etc.)
  It means that this error is occurred at service side.

• **Step 3. How to Exit from Error Code Display Mode:**

Simply, turn the power off. (Since Error Code display mode is executed under the condition of temporary cancellation of "Initial Settings", it wake up with normal condition when turn off the power.)

NOTE:

The error code can not be initialized.

7 Troubleshooting Guide

7.1. Checking Method of Body and Interchangeable Lens

1. **Initial (Default) Status Of The Lens Unit**
   The Lens unit which is supplied as a standard accessory for this camera unit (H-H020A, H-FS12032, H-FS14140, H-FS35100) shows the following status when the Lens is detached from the Camera unit.
   NOTE: Although the lens unit is attached it shows the same condition when the Camera turns off.

   H-H020A (Included in DMC-GX80C/GX85C):
   a. FOCUS RING
      The Focus condition does not changed although Focus ring is rotated. (Free rotation.)

   H-FS12032 (Included in DMC-GX80K/GX85K, DMC-GX80W/GX85W):
   a. ZOOM RING
      When the Zoom ring is rotated, Zoom condition is changing accordingly. (The 1st lens frame moves.)
      [Focal length : 12mm to 32mm [35mm film camera equivalent: 24mm to 64mm]]
   b. FOCUS RING
      The Focus condition does not changed although Focus ring is rotated. (Free rotation.)

   H-FS14140 (Included in DMC-GX80H/GX85H):
   a. ZOOM RING
      When the Zoom ring is rotated, Zoom condition is changing accordingly. (The 1st lens frame moves.)
      [Focal length : 14mm to 140mm [35mm film camera equivalent: 28mm to 280mm]]
   b. FOCUS RING
      The Focus condition does not changed although Focus ring is rotated. (Free rotation.)

   H-FS35100 (Included in DMC-GX80C/GX85C):
   a. ZOOM RING
      When the Zoom ring is rotated, Zoom condition is changing accordingly. (The 1st lens frame moves.)
      [Focal length : 35mm to 100mm [35mm film camera equivalent: 70mm to 200mm]]
   b. FOCUS RING
      The Focus condition does not changed although Focus ring is rotated. (Free rotation.)

2. **Initial Inspection Tips (Before Determine The Unit Being Faulty/Defective):**
   Since this unit is equipped with various functions/settings, some phenomenon/effect might be caused by miss usage of function and/or settings.
   It might be made a miss-judgement caused by miss usage of function & settings although the unit is working properly without fault.
   Therefore, check/confirm the followings before concluding/determine the unit being faulty/defective.
   NOTE: Refer to the Operating Instructions about content of various settings.
   Also, useful hint/tips for this unit is available at following URL, and is updated frequently.
   http://panasonic.jp/support/global/cs/dsc/

   If it is hard to determine whether the resolution is out of specification or not, proceed the “RESOLUTION INSPECTION”, before replacing the Lens Main Unit. (The unit might be mishandling, dropping or others.)

3. **Reference information**

MENU LIST(Quick Reference)

■ Mode Dial

※ iA	Intelligent Auto Mode / Intelligent Auto Plus Mode	M	Creative Video Mode
P	Programme AE Mode	C	Custom Mode
A	Aperture-Priority AE Mode		Panorama Shot Mode
S	Shutter-Priority AE Mode	SCN	Scene Guide Mode
M	Manual Exposure Mode		Creative Control Mode

Pressing the [MENU/SET button] displays the basic menu. All basic menu is not displayed in the red letters mode.
Some menus are displayed in service mode only.
* In iA, displayed menus are different in accordance with selected modes.

NOTE:
* When set [Menu Resume] in the [SETUP MENU] to [ON], the screen shows the last selected menu item when the camera is turned off.
⇒ [SETUP MENU] (3/6) ----- [Menu Resume] (ON / OFF)

■ Basic Menu

	[REC]	[MOTION PICTURE]	[CUSTOM]	[SETUP]	[PLAYBACK]
1st Page	Adjust to the preferred color or Photo Style Filter Settings OFF Aspect Ratio 4:3 1/8 Picture Size Quality	Adjust to the preferred color or Photo Style Filter Settings OFF 4K Live Cropping OFF 1/5 Snap Movie OFF Rec Format MP4	Save preferred settings Cust.Set Mem. Silent Mode OFF AF/AE Lock AE LOCK 1/9 AF/AE Lock Hold OFF Shutter AF ON	Select how to access the websit Online Manual Clock Set World Time 1/6 Travel Date Wi-Fi	Playback pictures in sequence Slide Show Playback Mode Location Logging 1/5 RAW Processing Light Composition
2nd Page	Select how to focus on the subj Focus Mode AFS Metering Mode Burst Rate H 2/8 4K PHOTO Bracket OFF	Select motion picture quality Rec Quality Exposure Mode Focus Mode AFS 2/5 Picture Mode Continuous AF ON	Press the shutter button halfway Half Press Release OFF Quick AF OFF Eye Sensor AF ON 2/9 Pinpoint AF Time MID Pinpoint AF Display PIP	Set up Beep and Shutter sound Beep Live View Mode 60fps Monitor Display 2/6 Monitor Luminance Economy	Remove the unwanted part from Clear Retouch Title Edit Text Stamp 2/5 Video Divide Time Lapse Video
3rd Page	Taking pictures with a delay tim Self Timer Highlight Shadow i.Dynamic OFF 3/8 i.Resolution OFF Post Focus OFF	Select brightness measurement Metering Mode Highlight Shadow i.Dynamic OFF 3/5 i.Resolution OFF Diffraction Compensation OFF	Lighting to aid focusing in dark AF Assist Lamp ON Direct Focus Area OFF Focus/Release Priority FOCUS 3/9 AF+MF OFF MF Assist ON	Select desired operation after co USB Mode TV Connection Menu Resume ON 3/6 Menu Background Menu Information ON	Create video from stop motion Stop Motion Video Resize Cropping 3/5 Rotate Rotate Disp. ON
4th Page	Multiple exposure images are ca Handheld Night Shot OFF HDR OFF HDR OFF 4/8 Multi Exp. Time Lapse Shot	To enlarge further without dete Ex. Tele Conv. OFF Digital Zoom OFF Stabilizer 4/5 Flkr Decrease OFF Silent Operation OFF	Select how to display magnified MF Assist Display PIP MF Guide ON Peaking ON 4/9 Histogram OFF Guide Line OFF	Select display language Language Version Disp. Exposure Comp. Reset OFF 4/6 Self Timer Auto Off ON No.Reset	Select picture to set as "Favorite" Favorite Print Set Protect 4/5 Face Rec Edit Picture Sort DATE/TIME
5th Page	You can easily create stop motic Stop Motion Animation Panorama Settings Shutter Type MSHTR 5/8 Shutter Delay OFF Flash	Display mic levels Mic Level Disp. OFF Mic Level Adj. LEVEL 3 Wind Noise Canceller STANDARD 5/5	White saturated areas flash in bl Highlight OFF Zebra Pattern OFF Monochrome Live View OFF 5/9 Constant Preview OFF Expo.Meter ON	Return all settings to shipping co Reset Reset Wi-Fi Settings Pixel Refresh 5/6 Sensor Cleaning Level Gauge Adjust.	Select a secondary delete confir Delete Confirmation 5/5
6th Page	To remove or minimize red-eye i Red-Eye Removal OFF ISO Limit Set OFF ISO Increments 1EV 6/8 Extended ISO OFF Long Shtr NR ON		Display the operation guide whe Dial Guide ON LVF Disp.Style Monitor Disp. Style 6/9 Monitor Info. Disp. ON Rec Area	ROM BACKUP Demo Mode OFF Format 6/6	
7th Page	Correct brightness of the screen Shading Comp. OFF Diffraction Compensation OFF Ex. Tele Conv. OFF 7/8 Digital Zoom OFF Color Space sRGB		Switch display between recorda Remaining Disp. Auto Review Fn Button Set 7/9 Q.MENU PRESET Dial Set		
8th Page	Set image stabilizer Stabilizer Face Recog. OFF Profile Setup OFF 8/8		Set whether or not to use video Video Button ON Power Zoom Lens Eye Sensor 8/9 Touch Settings Touch Scroll L		
9th Page			Display the mode menu when th Menu Guide ON Shoot w/o Lens OFF 9/9		

The menu item which can not be chosen is displayed in gray. When the menu page has no items can be chosen, the page is skipped display.

REMARKS:

[SCN Scene Guide Mode]

* Setting the mode dial to [Scene Guide Mode], then displaying the lower figure.
(Pressing the [MENU/SET button] twice, displays the basic menu.)

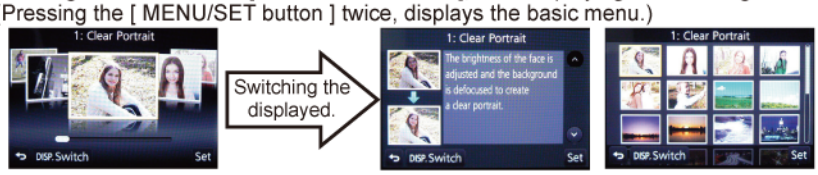

[Creative Control Mode]

* Setting the mode dial to [Creative Control Mode], then displaying the lower figure.
(Pressing the [MENU/SET button] twice, displays the basic menu.)

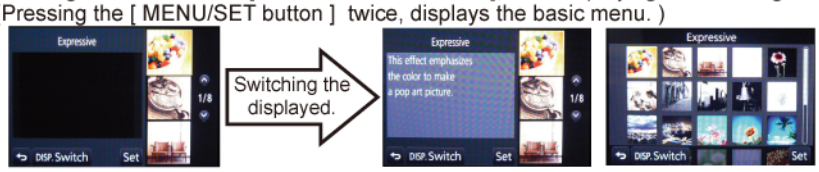

■ Other than Basic Menu

[iA Intelligent Auto Mode]

[Intelligent Auto Mode] and [Intelligent Auto Mode Plus] can be selected from [iA] menu.
In [Intelligent Auto] mode [REC] and [MOTION PICTURE], [CUSTOM] menu are limited and displayed following items only.
(In [Intelligent Auto Plus] mode, [Basic Menu] is displayed.)

	[iA]	[REC]	[MOTION PICTURE]	[CUSTOM]	[SETUP]	[PLAYBACK]
1st Page		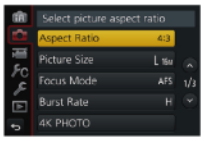	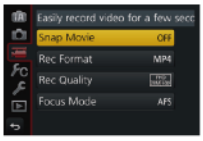	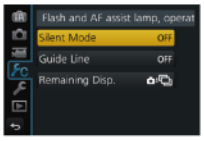	Same as [MENU LIST (Quick Reference)].	
2nd Page		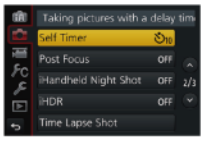				
3rd Page		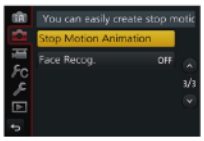				

[M Creative Video Mode]

[REC] is not displayed.
[MOTION PICTURE], [CUSTOM], [SETUP], and [PLAYBACK] are the same as above-mentioned Menu LIST (Quick Reference.))

[Panorama Shot Mode]

Setting the mode dial to [Panolama Sht Mode], then displaying the lower figure one or several seconds.
[MOTION PICTURE] is not displayed.
[REC], [CUSTOM], [SETUP], and [PLAYBACK] are the same as above-mentioned Menu LIST (Quick Reference.))

7.2. Wi-Fi Circuit

7.2.1. How to Remove Wi-Fi Password Protection

To prevent incorrect operation or use of the Wi-Fi function by a third party and to protect saved personal information, this unit protects the Wi-Fi function with a password.
It is unable to service with password locked condition. When accepting for repair, the unit has been set the Wi-Fi password by customer, run the [Reset Wi-Fi Settings] for removing Wi-Fi password, then check the operation.

[Reset Procedure of Wi-Fi Settings]

1) Press the [MENU/SET] button, and select the [SETUP] mode by Cursor buttons.
   Select [Reset Wi-Fi Settings] by Cursor buttons, then press the [MENU/SET] button.
2) Select [YES] and press the [MENU/SET] button.

(The [Reset Wi-Fi Settings] performs not only resetting Wi-Fi Password but also resetting other all Wi-Fi Settings.)

7.2.2. Checking of trouble caused by Wi-Fi Circuit or not

The Wi-Fi Circuit works properly if the wireless access point (broadband router) name (SSID) in use is displayed on a screen of [Manual Connection].

(Primary Confirmation)
Confirm that the wireless access point (broadband router) works properly.

(Procedure)
1) Select [Wi-Fi] in [Setup] menu.
2) Select [Wi-Fi Function] in [Wi-Fi] menu.
3) Select [New Connection] in [Wi-Fi] menu.
4) Select optional function in [Select a function] menu, then select [Direct] in [Select connection method] menu.
5) Select [Manual Connection] in [Select connection method] menu.
6) The Wi-Fi Circuit works properly if the wireless access point (broadband router) name (SSID) in use is displayed.

8 Service Fixture & Tools

8.1. Service Fixture and Tools

The following service fixture and tools are used for checking and servicing this unit.

Resistor for Discharging (1kΩ/5W) **ERG5SJ102**	LIGHT BOX (with DC Cable) **RFKZ0523**	ND FILTER 1 (ND 0.9) **VFK1164ND09**
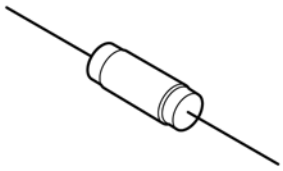 ∗ An equivalent type of Resistor may be used.	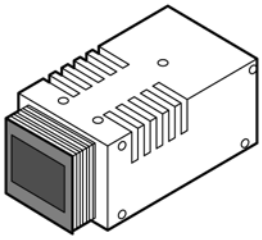 ∗ VFK1164TDVLB can be used.	
ND FILTER 2 (ND 0.3) **RFKZ0513**	ND filter 3 (ND 0.6) **VFK1164ND06**	CC FILTER 1 (CC-C7.5) **RFKZ0511**
CC FILTER 2 (CC-Y10) **RFKZ0512**	LB FILTER 1 (LBB2) **RFKZ0520**	LB FILTER 2 (LBB8) **RFKZ0521**
GRAY CARD **RFKZ0506**	RESOLUTION CHART **RFKZ0510**	Optical Axis Adjustment Chart **RFKZ0570**
	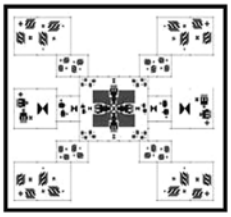 ∗ Supplied as divided chart parts. (Assemble it before use.)	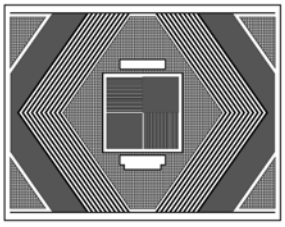

DRIVER **VFK1390**	TORQUE DRIVER **RFKZ0456**	Adjustment shaft × 3 **VMS7941**
	 ∗ Spec. : 2-30N·cm (Equiv.0.2-3kgf/cm)	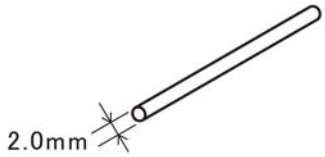 ∗ An equivalent type can be used. (Less than 2.0mm)
Camera Stand **RFKZ0333J**	Camera body : DMC-GX8 or DMC-GX80/GX85	Lens : H-X015 and H-FS014045 (conventinal)
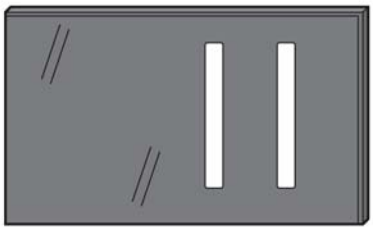	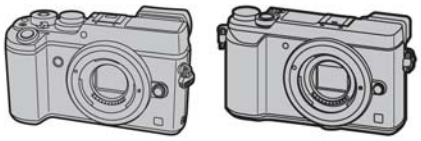 Correspond by the marketed commodity. (It does not supply as service fixture and tools.)	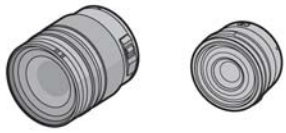 Correspond by the marketed commodity. (It does not supply as service fixture and tools.)
Lens Cleaning Kit (BK) **VFK1900BK**		
 ∗ Only supplied 10 set/box.		

About Adjustment Shaft:

- VMS7941 for H-H020A

8.2. Clean Box

- The repair quality is considered, and it is recommended working in the environment of specified clean level less than class 10,000 (Federal Standard 209D).

[NOTE]

- Work in the environment of specified clean level less than class 10,000 (Federal Standard 209D) when inside cleaning of a lens. Please refer to the following service manuals.
- H-FS12032PP/E/GK: Order No.DSC1311036CE
- H-FS35100PP/E/GK: Order No.DSC1410024CE
- H-H020APP/E/GK: Order No.DSC1307028CE
- H-FS14140PP/E/GK: Order No.DSC1305023CE/DSC1506509SE

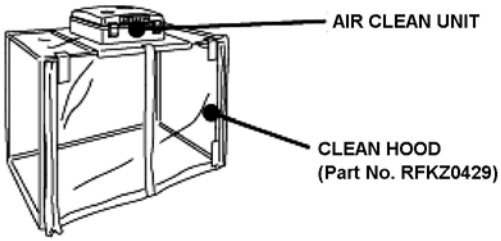

8.3. When Replacing the Main P.C.B.

After replacing the Main P.C.B., be sure to achieve adjustment.
Refer to the adjustment instruction in the adjustment software for details.

8.4. Service Position

This service position is used for checking and replacing parts. Use the following extension cables for servicing.

No.	Parts No.	Connection	From
1	RFKZ0466	FP9005(MAIN P.C.B.) ←→ FP8101(BATTERY P.C.B.)	29pin / 0.3 FFC
2	RFKZ0466	FP8102(BATTERY P.C.B.) ←→ FLASH UNIT	29pin / 0.3 FFC
3	VFK1978	FP9006(MAIN P.C.B.) ←→ FRONT CASE UNIT	31pin / 0.3 FFC
4	RFKZ0626	FP9004(MAIN P.C.B.) ←→ MOUNT BASE UNIT	21pin / 0.3 FFC
5	VFK1950	FP9302(SUB P.C.B.) ←→LVF UNIT	33pin / 0.3 FFC
6	VFK1480	FP9403(SUB P.C.B.) ←→ LVF UNIT	6pin / 0.5 FFC
7	VFK1951	FP9301(SUB P.C.B.) ←→ LCD UNIT	39pin / 0.3 FFC

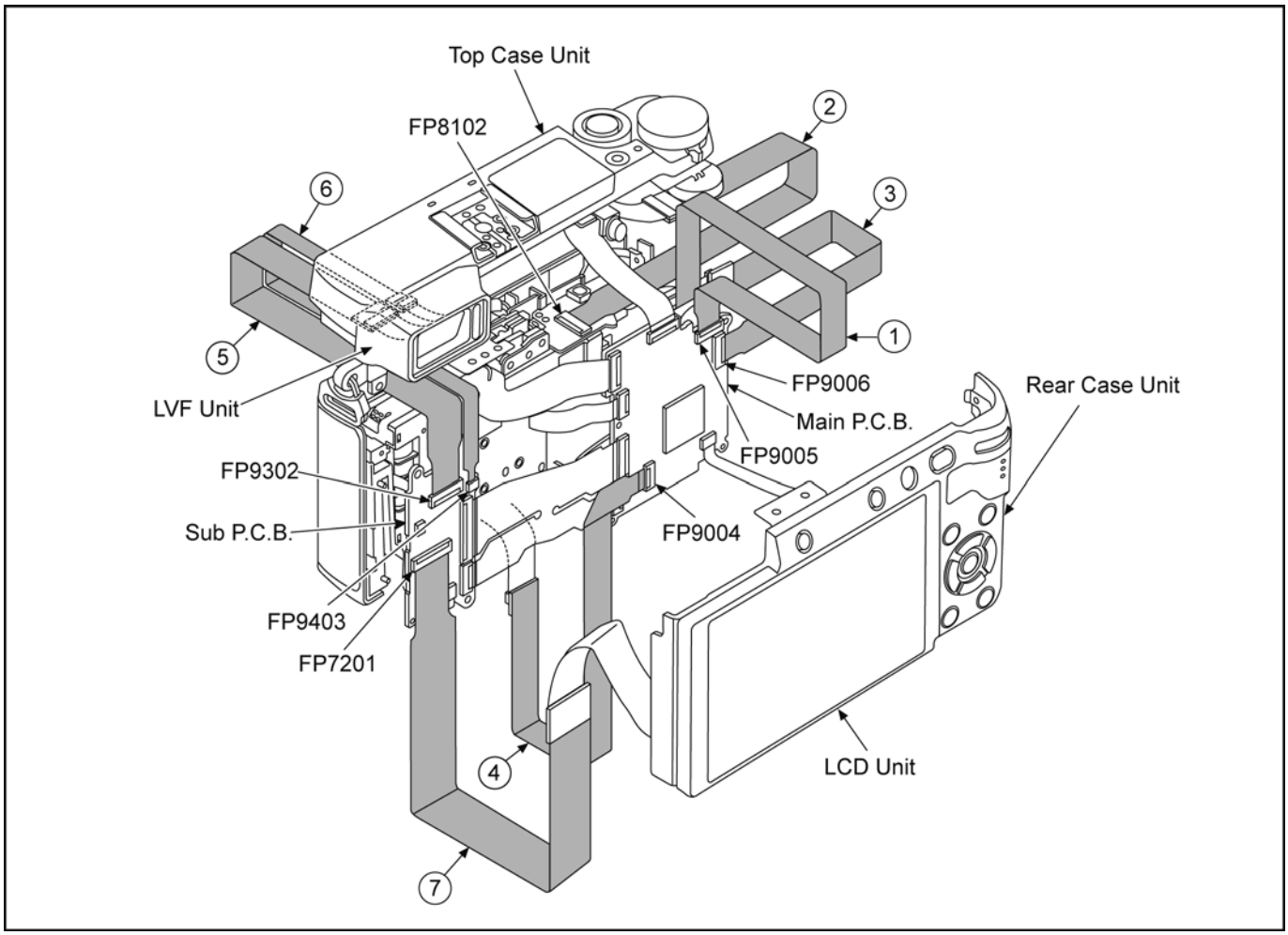

9 Disassembly and Assembly Instructions

9.1. Camera Body Part

9.1.1. Disassembly Flow Chart

This is a disassembling chart.
When assembling, perform this chart conversely.

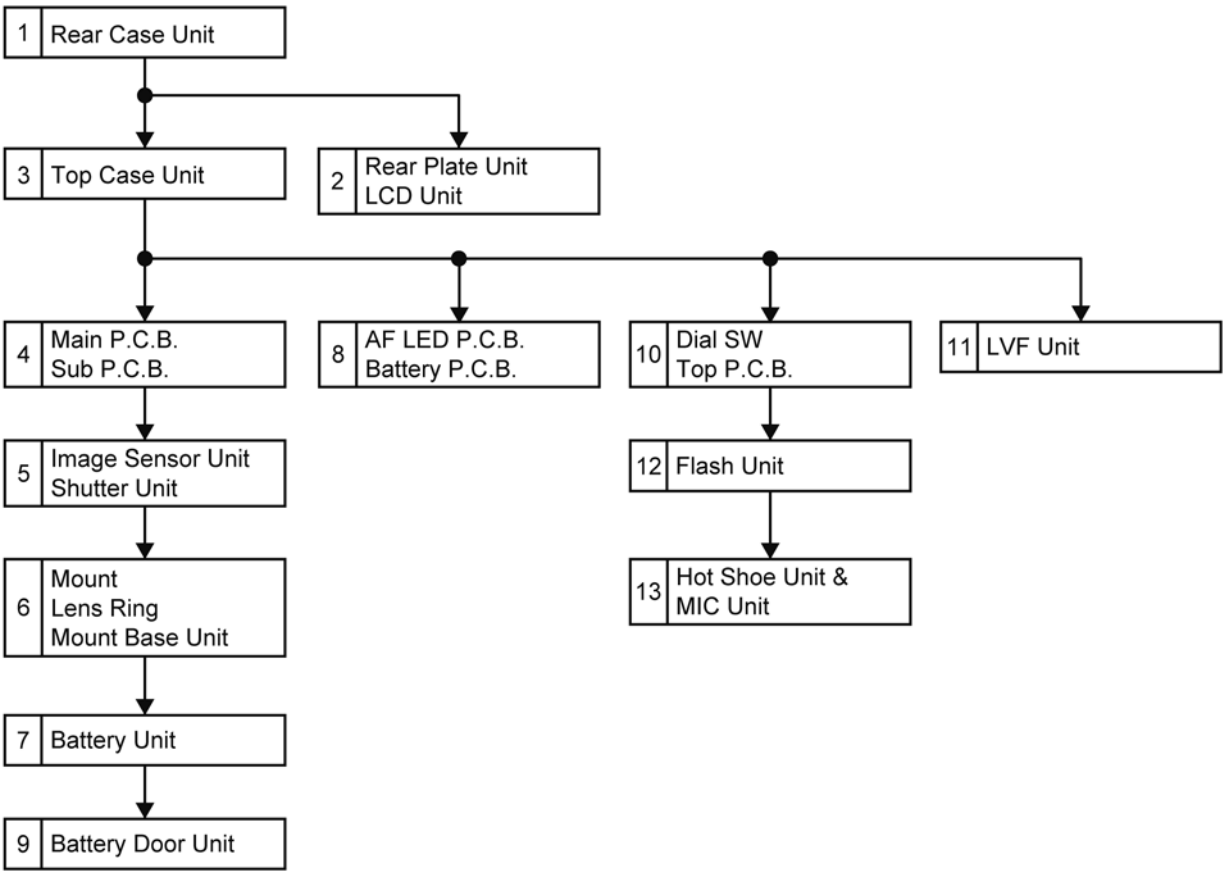

9.1.2. P.C.B. Location

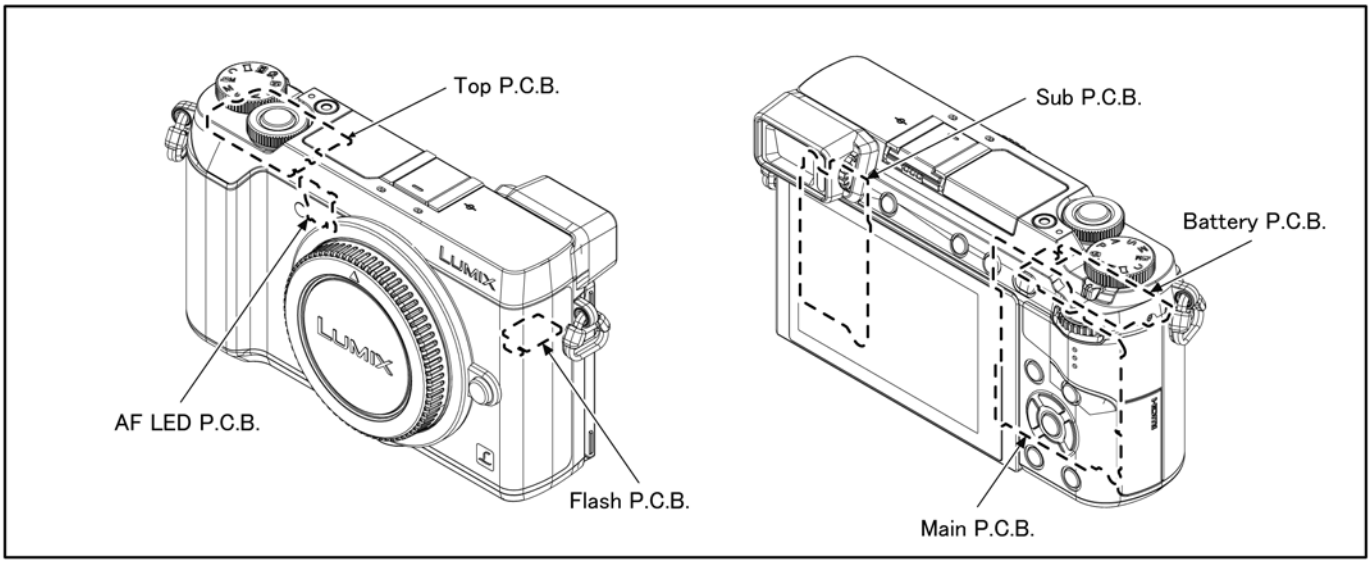

9.1.3. Disassembly Procedure

No.	Item	Fig.	Removal
1	Rear Case Unit	(Fig. D1)	Screw (A) x 1
			Screw (B) x 2
			Screw (C) x 2
		(Fig. D2)	Hot Shoe Cover
			Shoe Spring
			Screw (D) x 2
			Screw (E) x 1
		(Fig. D3)	Locking tab x 1
			FP9301 (Flex)
			FP9007 (Flex)
			Rear Case Unit
2	Rear Plate Unit, LCD Unit	(Fig. D4)	Screw (F) x 4
			FPC Tape
			LCD FPC Tape A
			Solder (2 points)
			Screw (G) x 6
			Screw (H) x 3
			Rear Plate Angle
			Convex x 7
			LCD Lock Piece
			LCD Lock Spring
			AE Lock Button
			Speaker
			Rear Plate Unit
		(Fig. D5)	LCD Unit
3	Top Case Unit	(Fig. D6)	FP9003 (Flex)
			FP9302 (Flex)
			FP9403 (Flex)
			Screw (I) x 2
			Screw (J) x 1
		(Fig. D7)	Locking tab x 3
			FP8102 (Flex)
			Top Case Unit
4	Main P.C.B., Sub P.C.B.	(Fig. D8)	FPC Tape
			FP3501 (Flex)
			FP3502 (Flex)
			FP9004 (Flex)
			FP9005 (Flex)
			FP9006 (Flex)
			FP9401 (Flex)
			FP9402 (Flex)
			FP9404 (Flex)
			FP9901 (Flex)
			Screw (K) x 1
			Screw (L) x 3
			Convex x 3
			Convex x 1
			Battery Earth Plate
			Main P.C.B.
			Sub P.C.B.
5	Image Sensor Unit, Shutter Unit	(Fig. D9)	Screw (M) x 3
			Spring x 3
			Image Sensor Unit
		(Fig. D10)	Screw (N) x 1
			Screw (O) x 2
			Damper O Ring
			Shutter Unit
6	Mount, Lens Ring, Mount Base Unit	(Fig. D11)	Screw (P) x 2
			Screw (Q) x 2
			Mount
			Convex x 1
			Mount Spring
			Screw (R) x 5
			Lens Ring
			Convex x 2
			Front Shoe Plate
		(Fig. D12)	Locking tab x 2
			Screw (S) x 1
			Capacitor Holder
			Screw (T) x 2
		(Fig. D13)	Lens Lock Pin Unit
			Lens Lock Pin Spring
			Mount Base Unit
7	Battery Unit	(Fig. D14)	Screw (U) x 2
		(Fig. D15)	Jack Cover
			Battery Unit
			Front Case Unit
			Front Spacer
8	AF LED P.C.B., Battery P.C.B.	(Fig. D16)	FPC Tape
			Solder (2 points)
			AF LED P.C.B.
			Screw (V) x 2
			Convex x 2
			Battery P.C.B.
9	Battery Door Unit	(Fig. D17)	Battery Door Shaft
			Battery Door Spring
			Battery Door Unit
10	Dial SW, Top P.C.B.	(Fig. D18)	Screw (W) x 2
			FP7001 (Flex)
			Convex x 2
			Dial SW
			Strap Holder R Unit
			FP7002 (Flex)
			Screw (X) x 1
		(Fig. D19)	Main - Top FPC
			Top P.C.B.
			Power Panel
			Mode Dial Rotor
11	LVF Unit	(Fig. D20)	Screw (Y) x 1
			Hooking part x 2
			Eye Cup Unit
			Screw (Z) x 1
			LVF Unit
12	Flash Unit	(Fig. D21)	Screw (a) x 1
			Screw (b) x 1
			Convex x 2
			Top Plate
			Flash Lock Lever
			Flash Lock Spring
			Flash Sheet
		(Fig. D22)	Convex x 1
			Convex x 2
		(Fig. D23)	Convex x 1
			Flash Unit
13	Hot Shoe Unit & MIC Unit	(Fig. D24)	MIC Damper x 2
			Hot Shoe Unit & MIC Unit

NOTE:
- When servicing and reassembling, remove the memory card and battery from the unit.
- Install the body cap to prevent garbage and dust except when it is necessary.

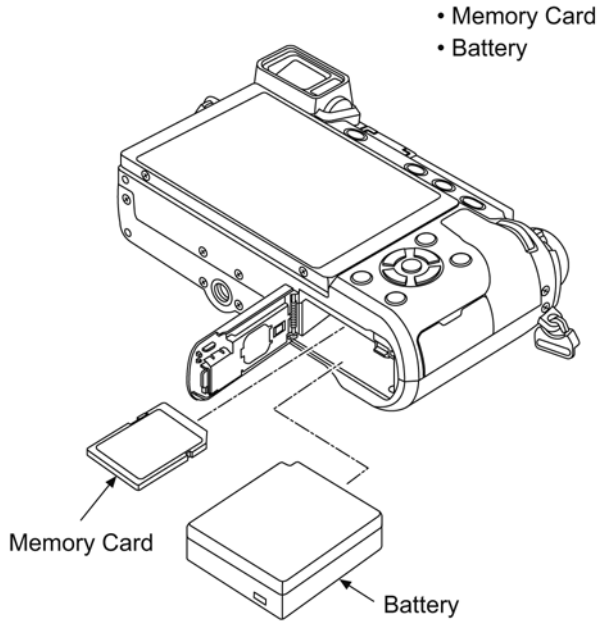

9.1.3.1. Removal of the Rear Case Unit

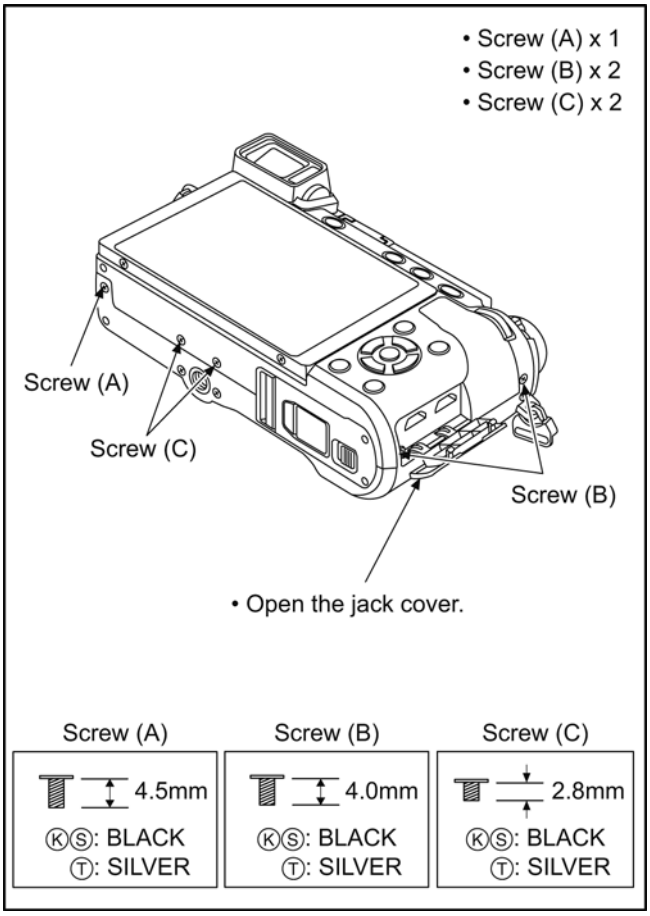

(Fig. D1)

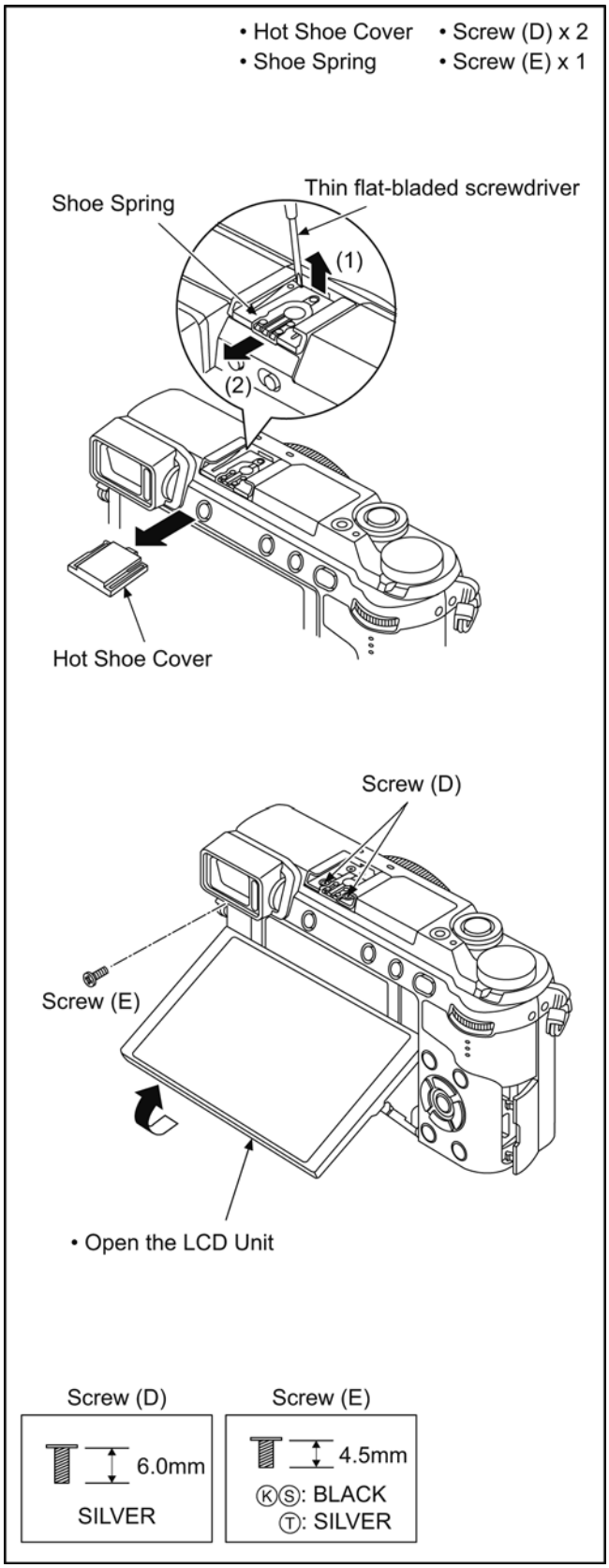

(Fig. D2)

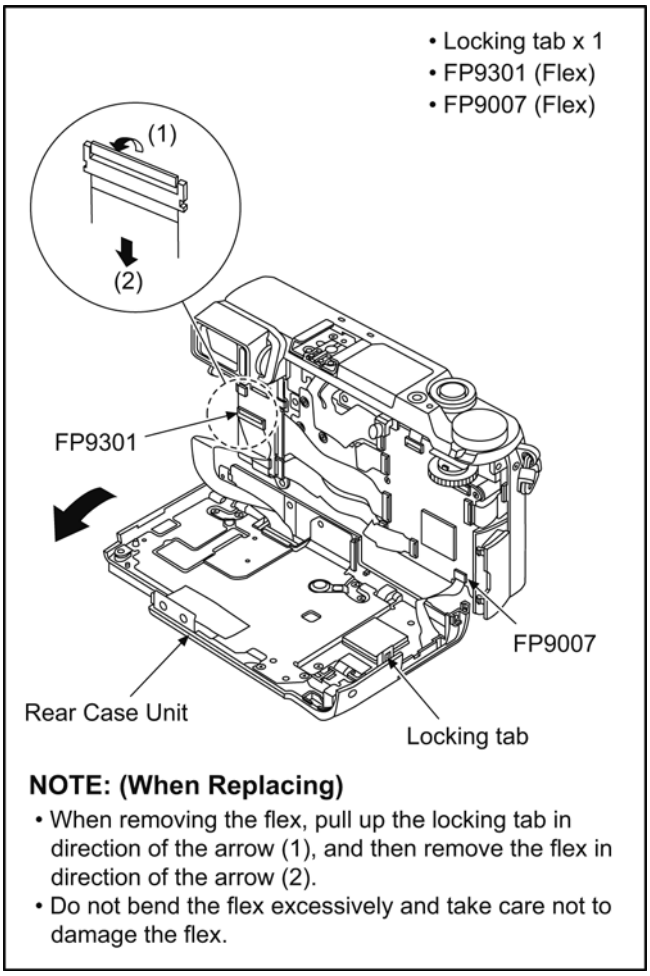

(Fig. D3)

9.1.3.2. Removal of the Rear Plate Unit and LCD Unit

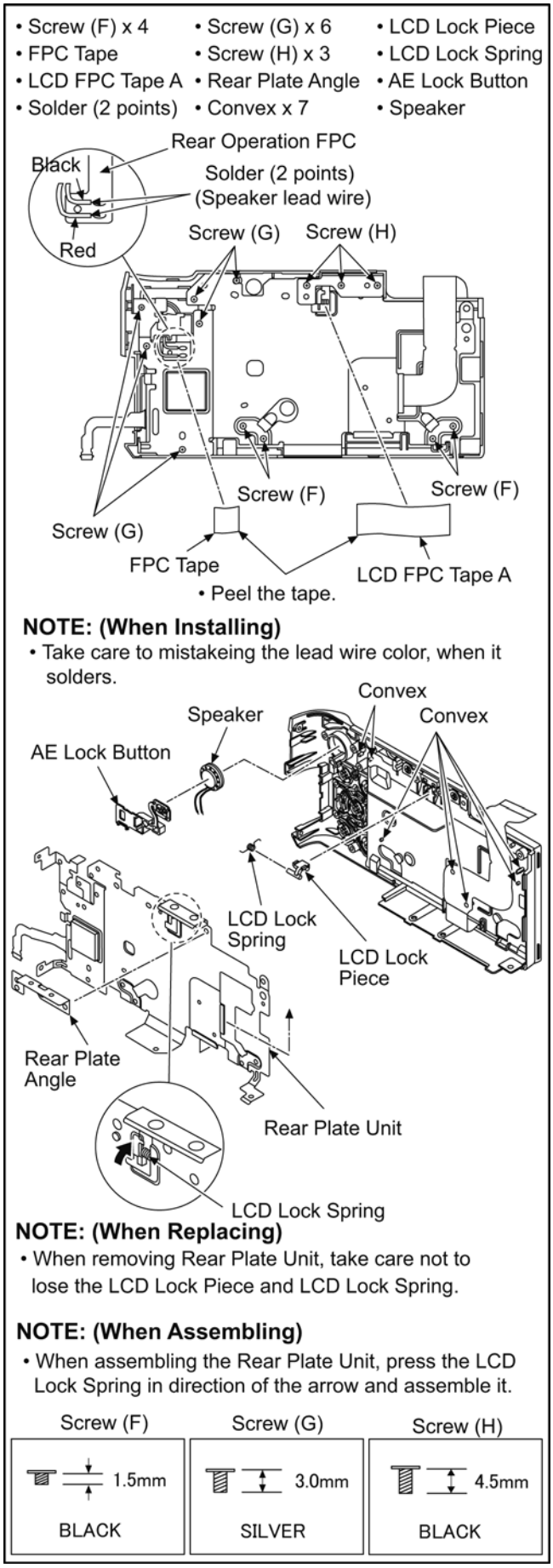

(Fig. D4)

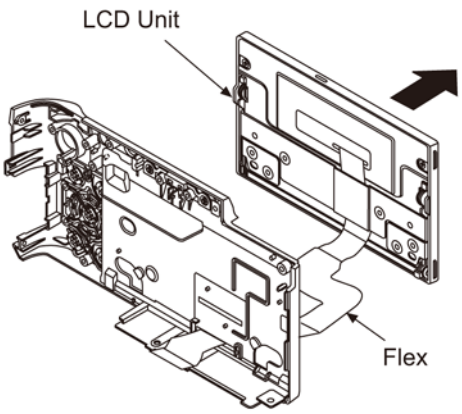

NOTE: (When Replacing)

- Do not bend the flex excessively and take care not to damage the flex.

Pasting position standard

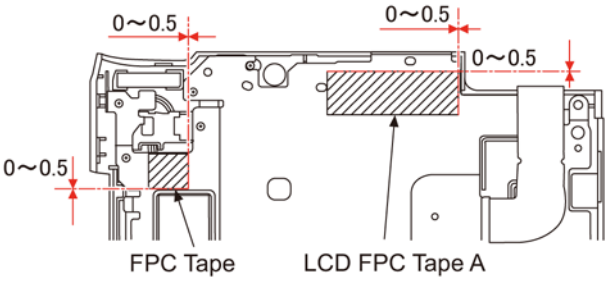

(Fig. D5)

9.1.3.3. Removal of the Top Case Unit

- FP9003 (Flex)
- FP9403 (Flex)
- FP9302 (Flex)
- Screw (I) x 2
- Screw (J) x 1

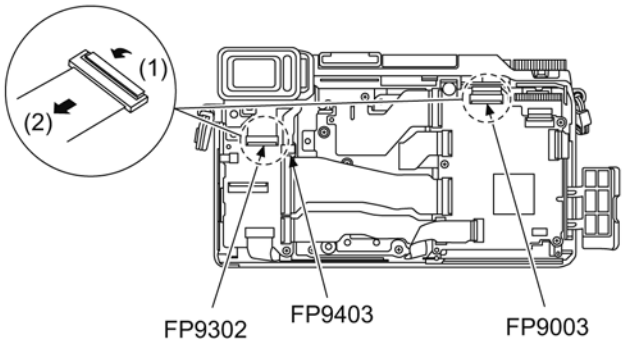

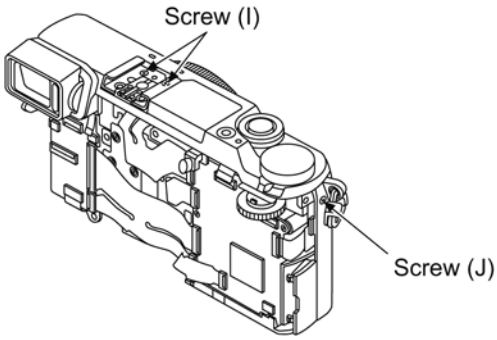

NOTE: (When Replacing)

- When removing the flex, pull up the locking tab in direction of the arrow (1), and then remove the flex in direction of the arrow (2).
- Do not bend the flex excessively and take care not to damage the flex.

Screw (I)	Screw (J)
6.0mm SILVER	4.0mm Ⓚ Ⓢ: BLACK Ⓣ: SILVER

(Fig. D6)

• Locking tab x 3
• FP8102 (Flex)

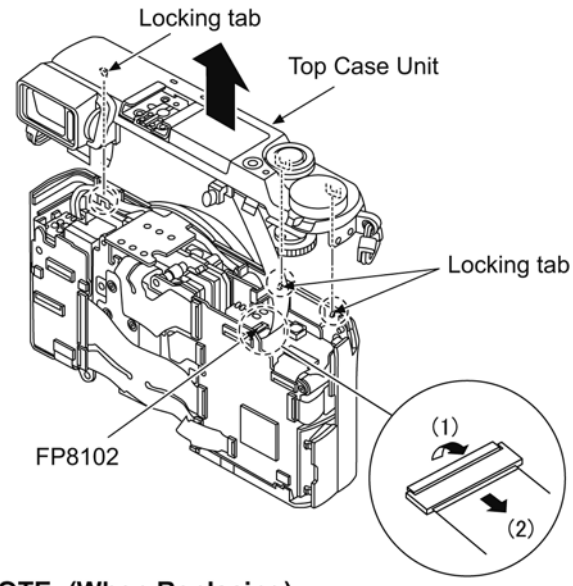

NOTE: (When Replacing)

- When removing the flex, pull up the locking tab in direction of the arrow (1), and then remove the flex in direction of the arrow (2).
- Do not bend the flex excessively and take care not to damage the flex.

⚠ CAUTION

Be sure to discharge the E.Capacitor on Flash P.C.B. before disassembling.
Be careful of the high voltage circuit on Flash P.C.B. when servicing.

1. Remove the Top Case Unit.
2. Put the insulation tube on the lead part of resistor (ERG5SJ102: 1kΩ / 5W).
   (An equivalent type of resistor may be used.)
3. Put the resistor between both terminals of E.Capacitor on the Flash P.C.B. for approx. 5 seconds.
4. After discharging, confirm that the E.Capacitor voltage is lower than 10V by using a voltmeter.

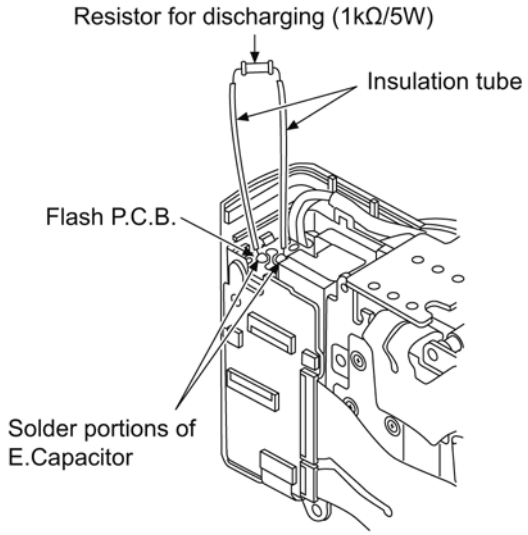

(Fig. D7)

9.1.3.4. Removal of the Main P.C.B. and Sub P.C.B.

• FPC Tape	• FP9006 (Flex)	• Screw (K) x 1
• FP3501 (Flex)	• FP9401 (Flex)	• Screw (L) x 3
• FP3502 (Flex)	• FP9402 (Flex)	• Convex x 3
• FP9004 (Flex)	• FP9404 (Flex)	• Convex x 1
• FP9005 (Flex)	• FP9901 (Flex)	• Battery Earth Plate

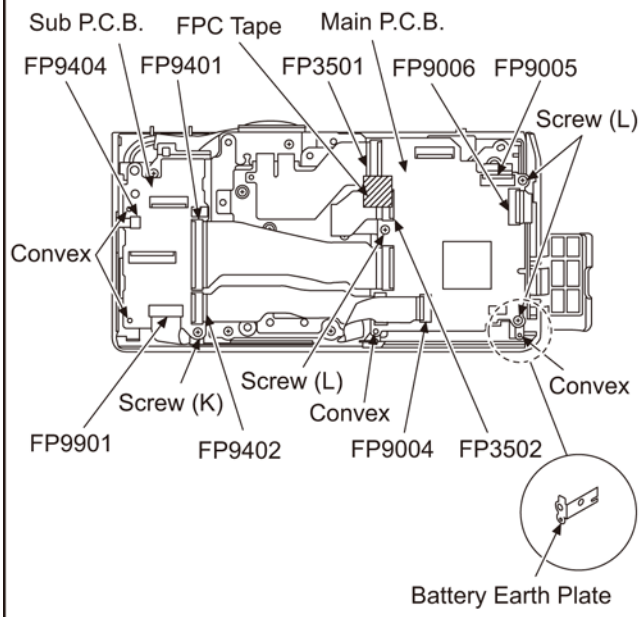

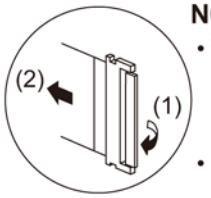

NOTE: (When Replacing)

- When removing the flex, pull up the locking tab in direction of the arrow (1), and then remove the flex in direction of the arrow (2).
- Do not bend the flex excessively and take care not to damage the flex.
- When removing Main P.C.B., take care not to lose the Battery Earth Plate.

Pasting position standard

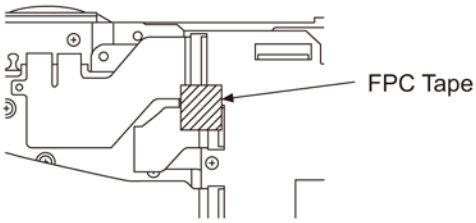

Pasting position standard

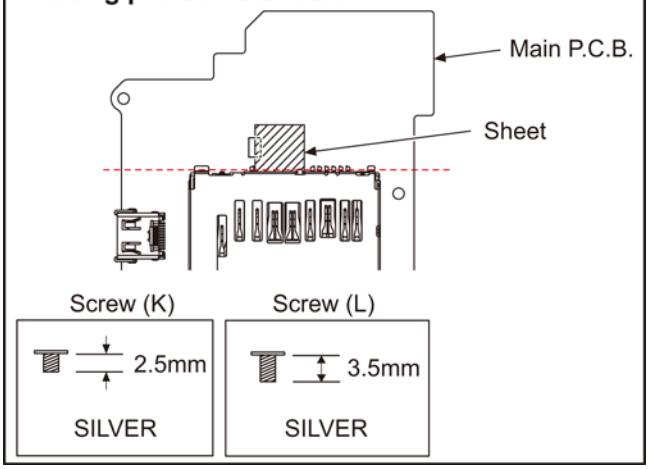

(Fig. D8)

9.1.3.5. Removal of the Image Sensor Unit and Shutter Unit

• Screw (M) x 3 • Spring x 3

IMPORTANT NOTICE:
• When remove or turn the flange back adjustment screw, "simplicity flange back adjustment" is necessary.
Perform the "simplicity flange back adjustment" according to contents described in "10 Measurement and Adjustment" section of this service manual.

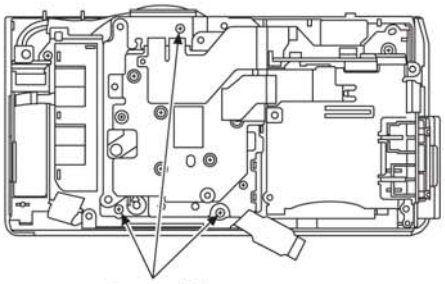

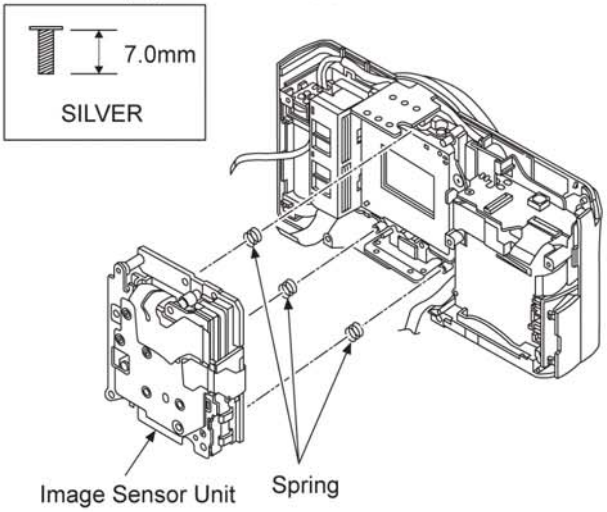

NOTE: (When Replacing)
• When removing Image Sensor Unit, take care not to lose the Spring.

IMPORTANT NOTICE:
• Be careful not to touch the shaded portion (X contact and motor, etc.) so that the characteristic of the Image Sensor Unit may change. (Handle it as shown in the figure below.)

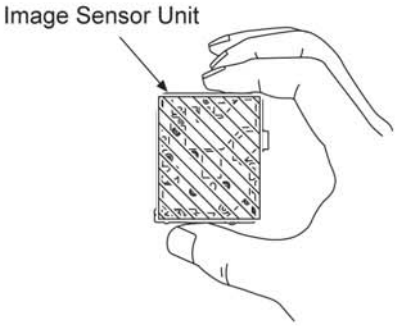

(Fig. D9)

• Screw (N) x 1 • Damper O Ring
• Screw (O) x 2

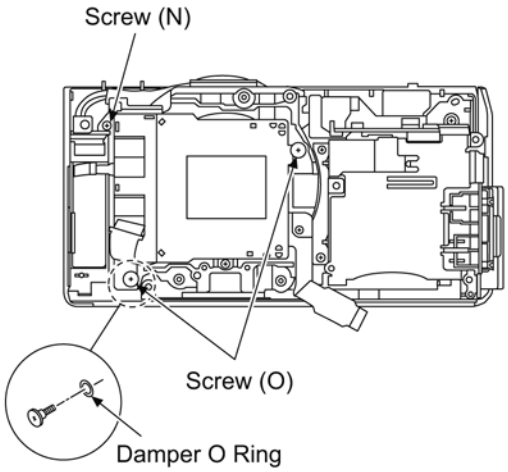

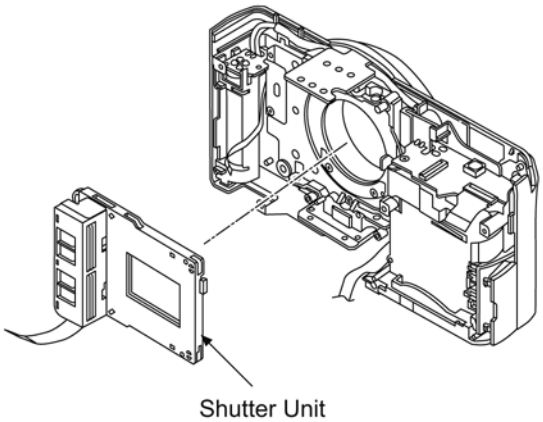

Screw (N)	Screw (O)
2.8mm	4.1mm
BLACK	SILVER

(Fig. D10)

9.1.3.6. Removal of the Mount, Lens Ring and Mount Base Unit

IMPORTANT NOTICE:
- Take care not apply any bending load to the charging E.Capacitor.

- Before performing the following procedures, remove the body cap.
  - Screw (P) x 2
  - Screw (Q) x 2
  - Convex x 1
  - Mount Spring
  - Screw (R) x 5
  - Convex x 2
  - Front Shoe Plate

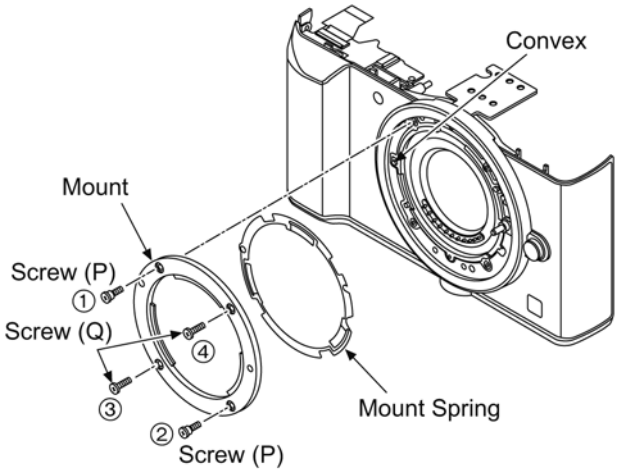

NOTE: (When Installing)
- Using torque driver (RFKZ0456), tighten 4 screws (screw (P) and screw(Q)) according to following:
  [Screw order]: ① → ② → ③ → ④
  [Screw torque]: 8 to 20 N•cm

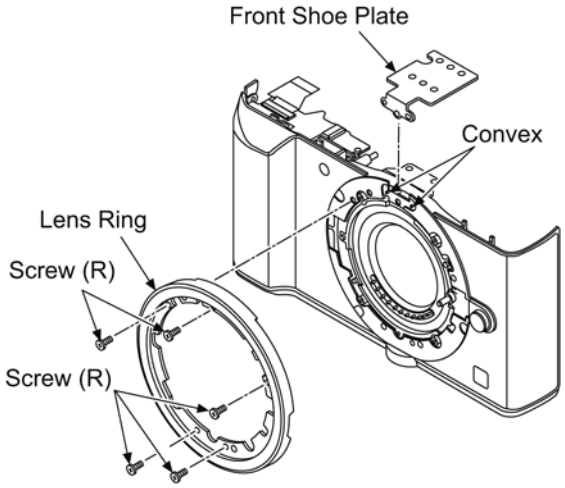

Screw (P)	Screw (Q)	Screw (R)
5.0mm	5.0mm	4.0mm
SILVER	SILVER	SILVER

(Fig. D11)

IMPORTANT NOTICE:
- Take care not apply any bending load to the charging E.Capacitor.

- Locking tab x 2
- Screw (S) x 1
- Capacitor Holder
- Screw (T) x 2

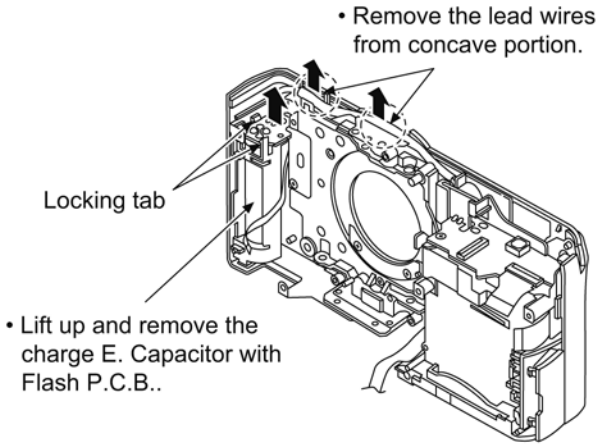

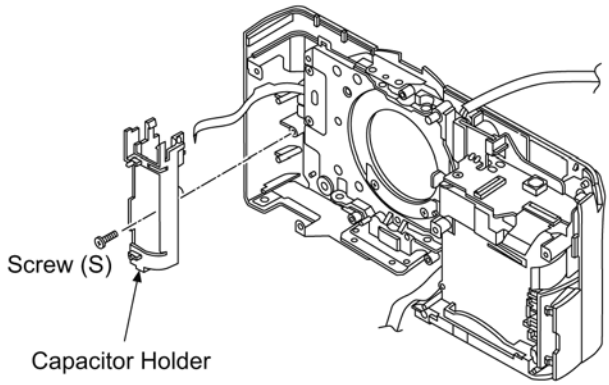

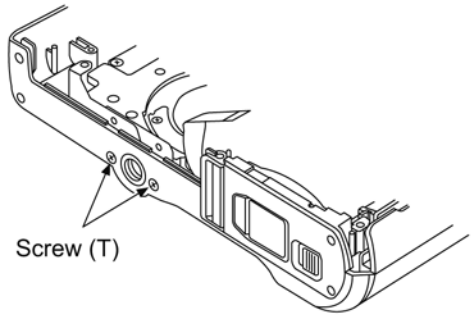

Screw (S)	Screw (T)
3.5mm	4.5mm
SILVER	Ⓚ Ⓢ: BLACK Ⓣ: SILVER

(Fig. D12)

IMPORTANT NOTICE:
- Take care not apply any bending load to the charging E.Capacitor.

- Lens Lock Pin Unit
- Lens Lock Pin Spring

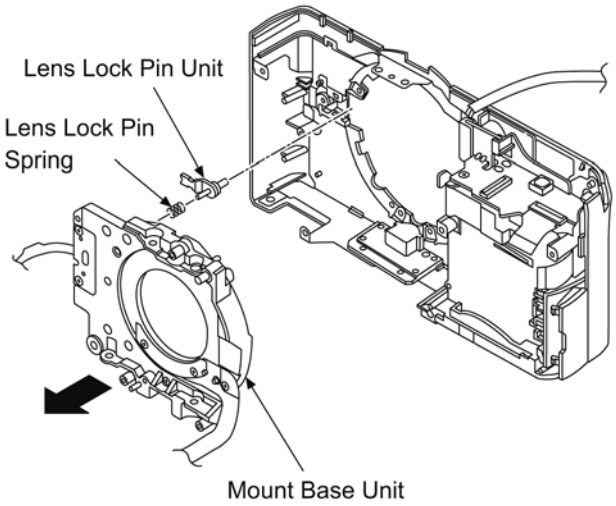

(Fig. D13)

9.1.3.7. Removal of the Battery Unit

IMPORTANT NOTICE:
- Take care not apply any bending load to the charging E.Capacitor.

- Screw (U) x 2

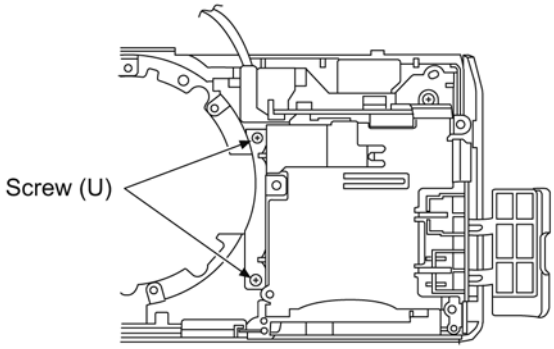

Screw (U)

2.0mm

SILVER

(Fig. D14)

IMPORTANT NOTICE:
- Take care not apply any bending load to the charging E.Capacitor.

- Jack Cover
- Front Case Unit
- Front Spacer

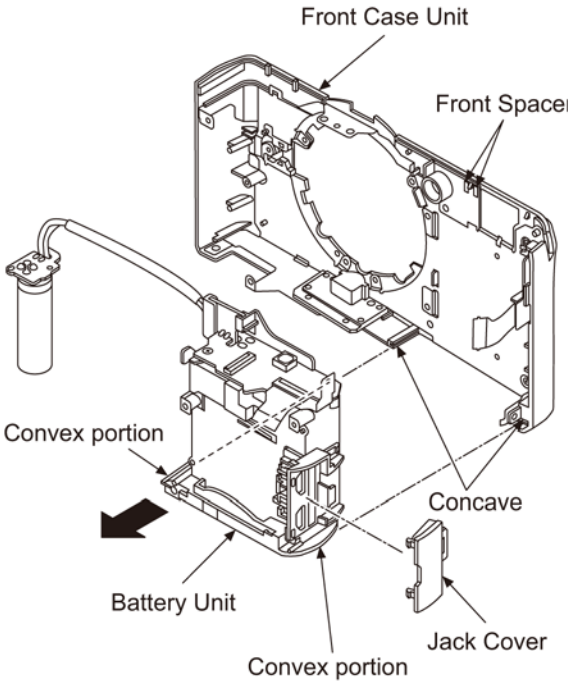

NOTE: (When Installing)
- Align the convex portions of Battery Unit and concaves of Front Case, and then attach the Battery Unit.

Pasting position standard

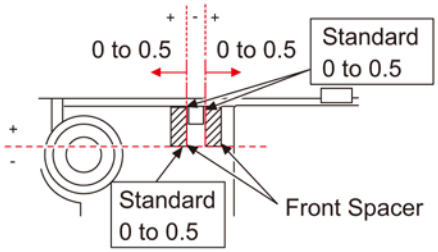

(Fig. D15)

9.1.3.8. Removal of the AF LED P.C.B. and Battery P.C.B.

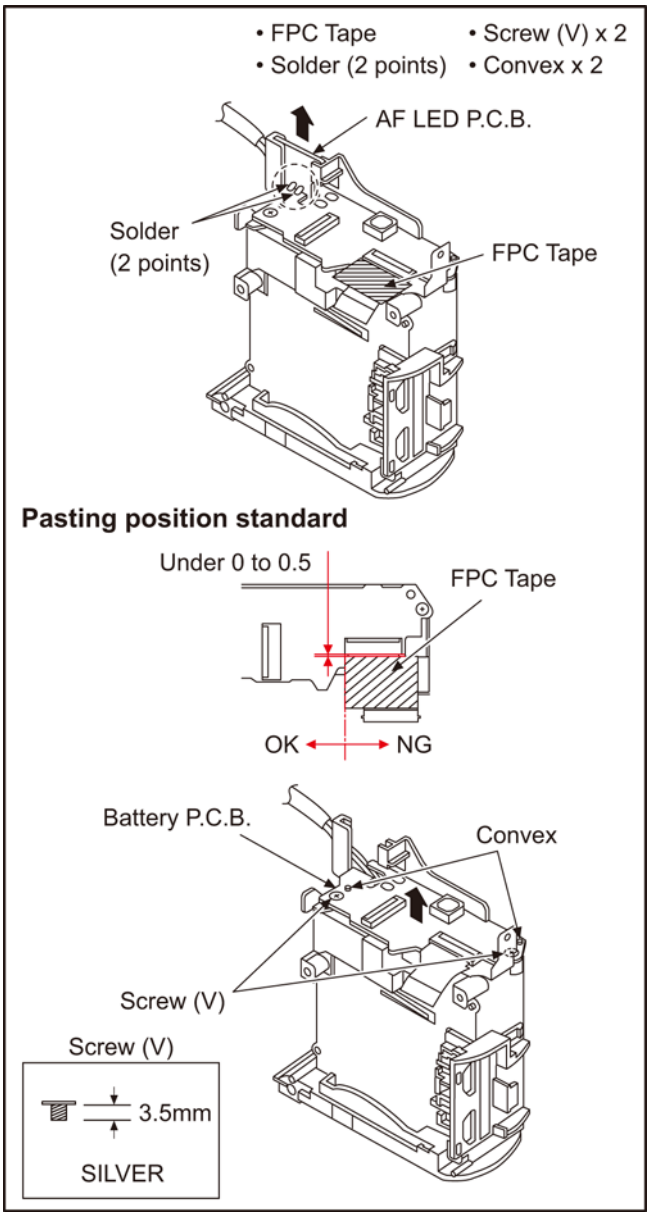

(Fig. D16)

9.1.3.9. Removal of the Battery Door Unit

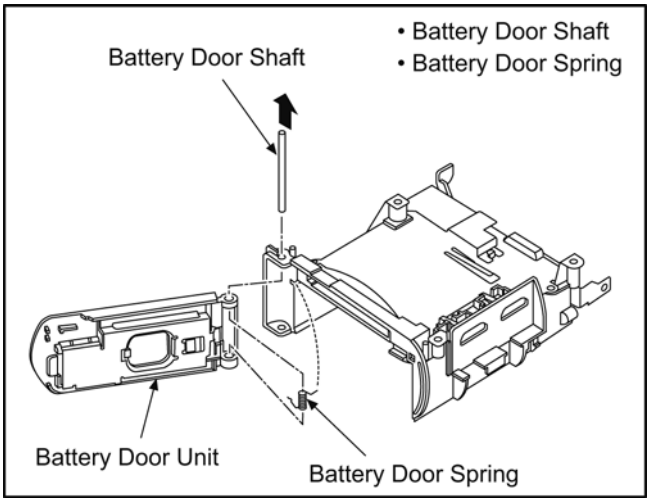

(Fig. D17)

9.1.3.10. Removal of the Dial SW and Top P.C.B.

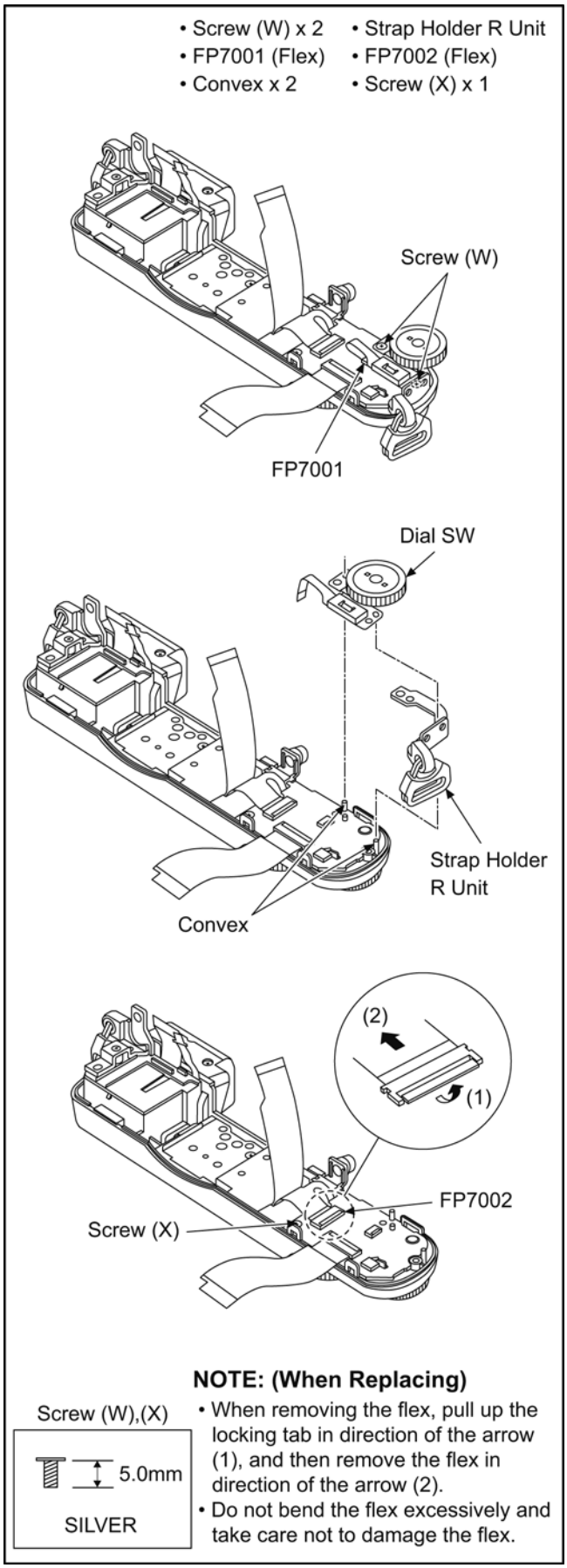

(Fig. D18)

• Main - Top FPC • Mode Dial Rotor
• Power Panel

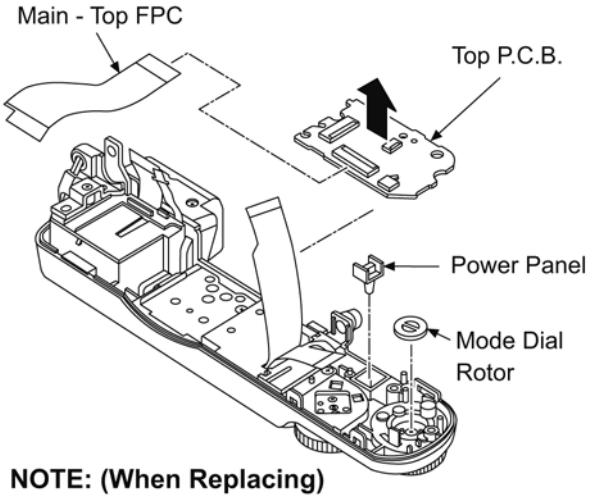

NOTE: (When Replacing)

• When removing Top P.C.B., take care not to lose the Power Panel and Mode Dial Rotor.

NOTE: (When Installing)

• Align the concave portions of Mode Dial Rotor and convexes of Mode Dial, and then attach them.

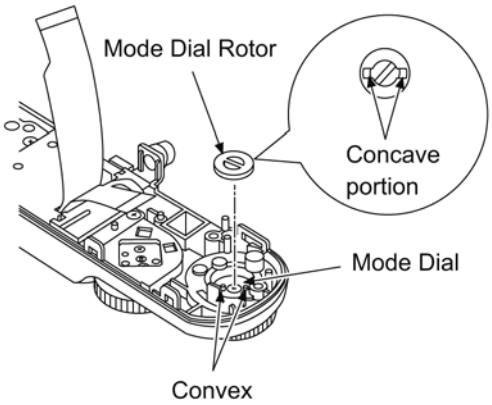

NOTE: (When Installing)

• When installing the Top P.C.B., align the concave portion of Mode Dial Rotor and convex of Mode Dial SW. And take care not to be strike the power switch lever with knob of power lever.

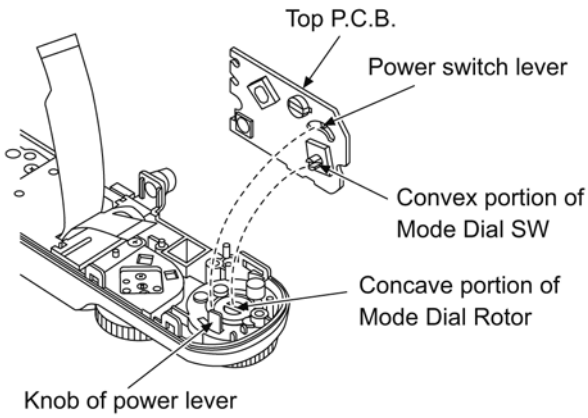

(Fig. D19)

9.1.3.11. Removal of the LVF Unit

• Screw (Y) x 1 • Eye Cup Unit
• Hooking part x 2 • Screw (Z) x 1

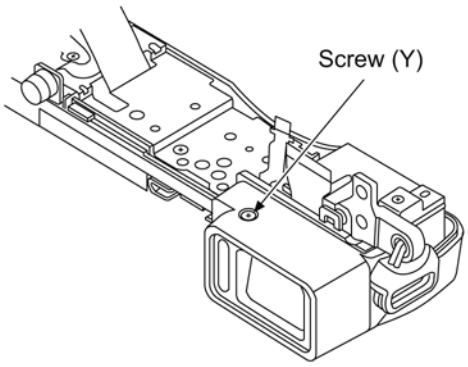

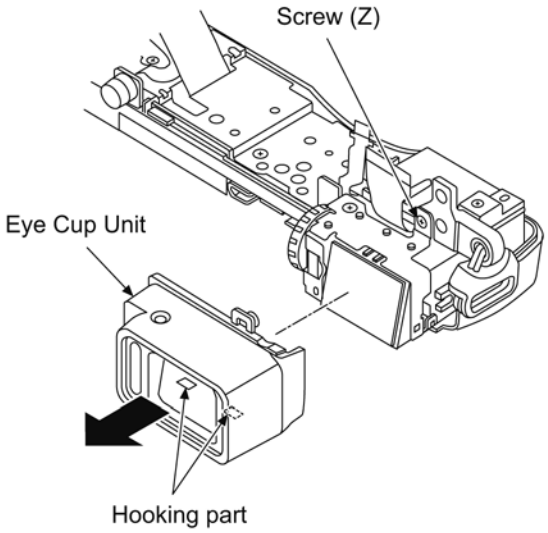

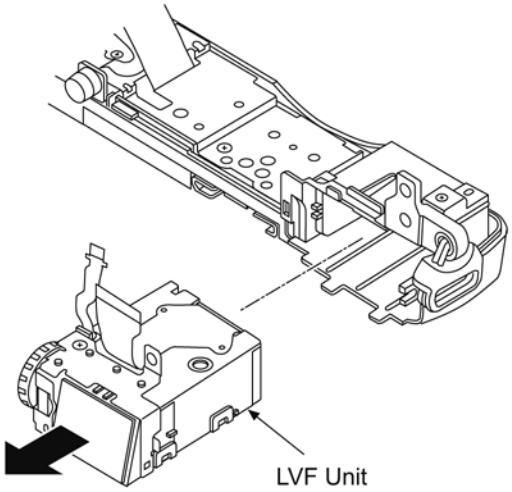

Screw (Y)	Screw (Z)
4.5mm	2.5mm
BLACK	SILVER

(Fig. D20)

9.1.3.12. Removal of the Flash Unit

- Screw (a) x 1
- Screw (b) x 1
- Convex x 2
- Top Plate
- Flash Lock Lever
- Flash Lock Spring
- Flash Sheet

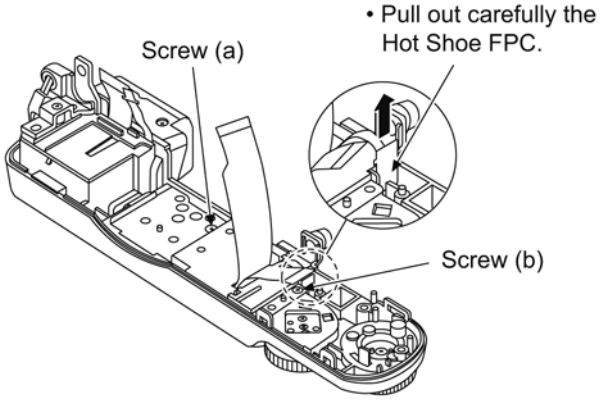

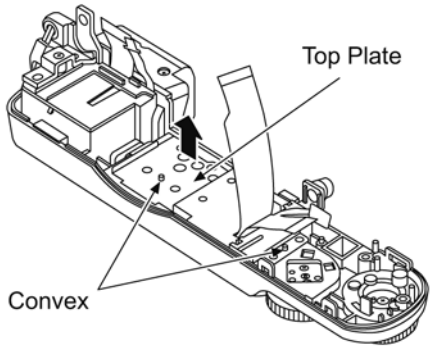

NOTE: (When Replacing)

- Do not bend the flex excessively and take care not to damage the flex.

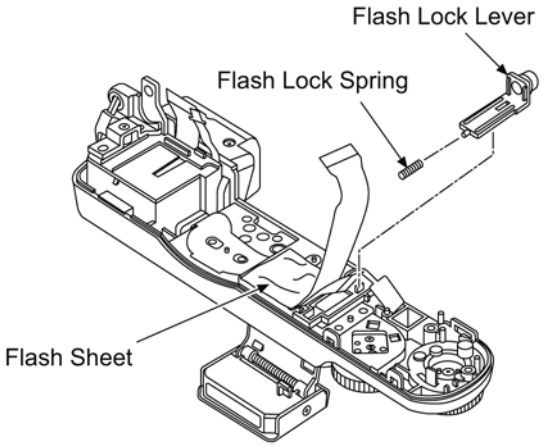

Screw (a)	Screw (b)
3.0mm	5.0mm
SILVER	SILVER

(Fig. D21)

Pasting position standard

- Convex x 1
- Convex x 2

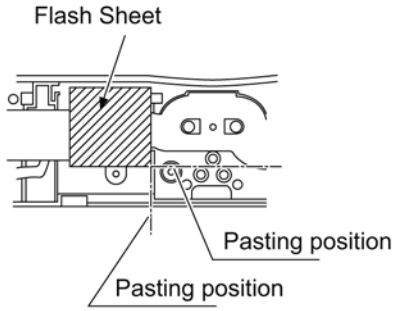

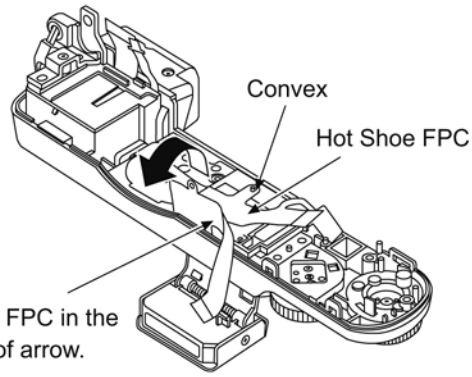

- Raise the FPC in the direction of arrow.

NOTE: (When Replacing)

- Do not bend the flex excessively and take care not to damage the flex.

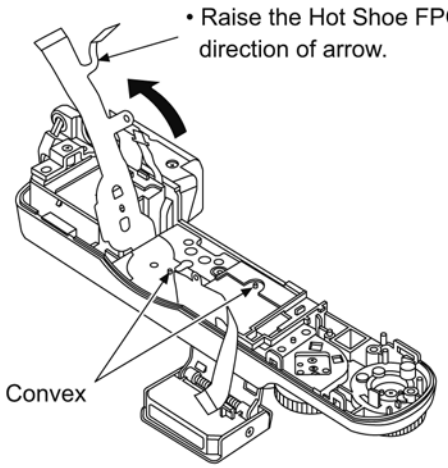

(Fig. D22)

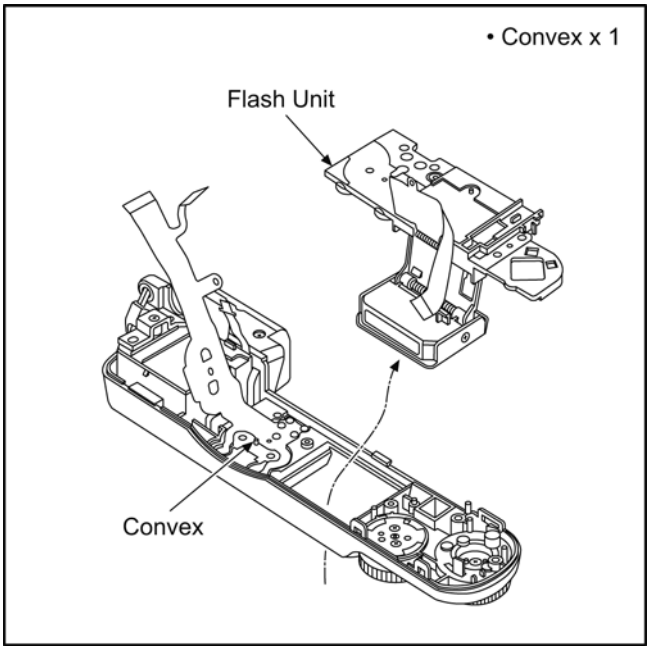

(Fig. D23)

9.1.3.13. Removal of the Hot Shoe Unit & MIC Unit

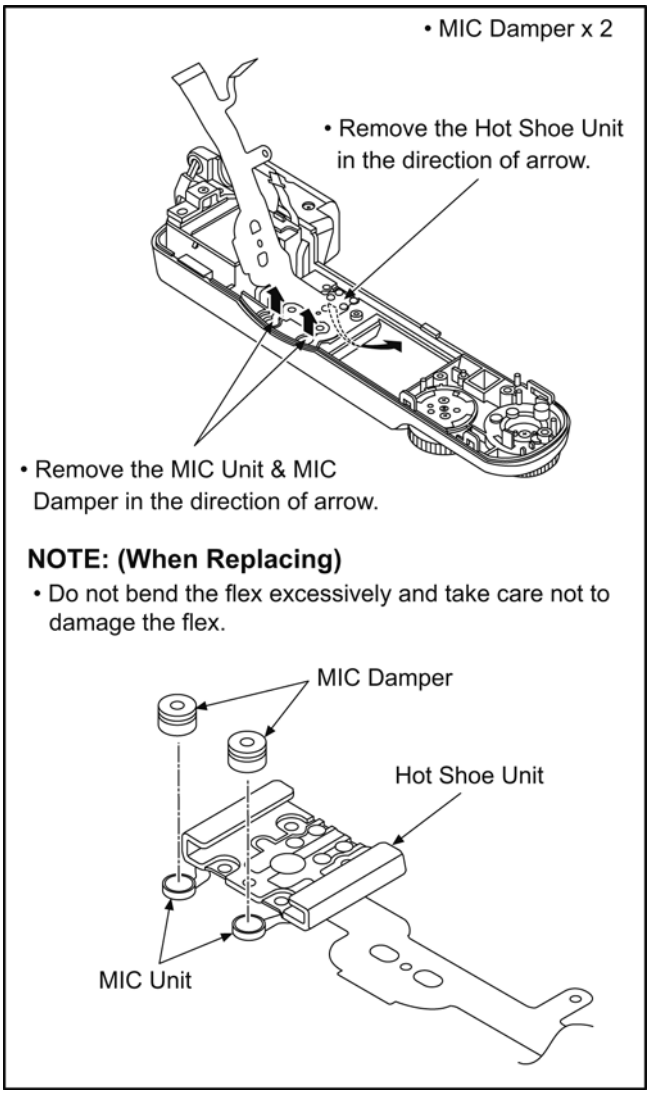

(Fig. D24)

NOTE: (When Installing)

Make sure to confirm the following points when installing:

- The Screw is tightened enough.
- Installing conditions are fine. (No distortion, no abnormal-space.)
- No dust and/or dirt on image sensor surface. (live mos)
- LCD image is fine. (No dust and/or dirt on it, and no gradient images.)

9.2. Disassembly and Assembly Procedure for the Lens

Please refer to the following service manuals about Disassembly and Assembly of bundled lenses.

- H-FS12032PP/E/GK: Order No.DSC1311036CE
- H-FS35100PP/E/GK: Order No.DSC1410024CE
- H-H020APP/E/GK: Order No.DSC1307028CE
- H-FS14140PP/E/GK:
  Order No.DSC1305023CE/DSC1506509SE

10 Measurements and Adjustments

10.1. Matrix Chart for Replaced Part and Necessary Adjustment

The relation between Replaced part and Necessary Adjustment is shown in the following table.
When concerned part is replaced, be sure to achieve the necessary adjustment(s).
As for Adjustment condition/procedure, consult the “Adjustment Manual” which is available in Adjustment software.

NOTE:

After adjustments have been terminated, make sure to achieve “Initial Settings”.
After updates it to the latest firmware, the adjustment is executed.

FLAG	Adjustment Item	Replacing Parts							
		Main P.C.B/ Flash-ROM (IC6003) (*4)	VENUS ENGINE (IC6001)	Image sensor unit (*1)	Shutter unit (*3)	G Sensor (Sub P.C.B. or IC9401)	Eye sensor	BIS gyro (Front case unit)	Lens contact/ Mount base unit
AF SS1 SS2 BIS	IMAGE SENSOR effective pixels / BIS Frame linearity adjustment	○	---	○	○	---	---	○	○
---	Simplicity flange back adjustment (*2)	---	---	○	○	---	---	○	○
PZM	VENUS-ZOOM inspection	○	○	---	---	---	---	---	---
SHT	Shutter adjustment	○	---	---	○	---	---	---	---
ISO	ISO sensitivity adjustment	○	---	○	---	---	---	---	---
SEN	High brightness coloration inspection	○	---	○	---	---	---	---	---
SAT	Ofset gain adjustment	○	---	○	---	---	---	---	---
WBL	WB (Low color temperature) adjustment (*5)	○	---	○	---	---	---	---	---
WBM	WB (High color temperature) adjustment (*5)	○	---	○	---	---	---	---	---
WKI	IMAGE SENSOR white scratch compensation	○	---	○	---	---	---	---	---
BKI	IMAGE SENSOR black scratch compensation	○	---	○	---	---	---	---	---
EYE	Eye Sensor sensitivity	○	---	---	---	---	○	---	---
AA1 AA2 AA3	G sensor adjustment (*6)	○	---	---	---	○	---	---	---
GYRO	Gyro sensitive / DC offset adjustment (*7)	○	---	---	---	---	---	○	---

***1 NOTE: (About Image Sensor Unit)**

When remove or turn the flange back adjustment screw, “Simplicity flange back adjustment” *2 is necessary.

***2 NOTE: (About Simplicity flange back adjustment)**

When remove or turn the flange back adjustment screw, “Simplicity flange back adjustment” is necessary.
When remove the flange back adjustment screw, please don’t reuse it. Use new one.

[Abstract of “Simplicity flange back adjustment”]

Set the camera in front of the chart and set center of the chart picture on LCD.
When execute software, camera works AF on 5 spots automatically.
Calculate flange back value at 5 spots and display on PC screen.
Adjust flange back value within the specification by the 3 screws.
The details are refer to adjustment manual in adjustment software.

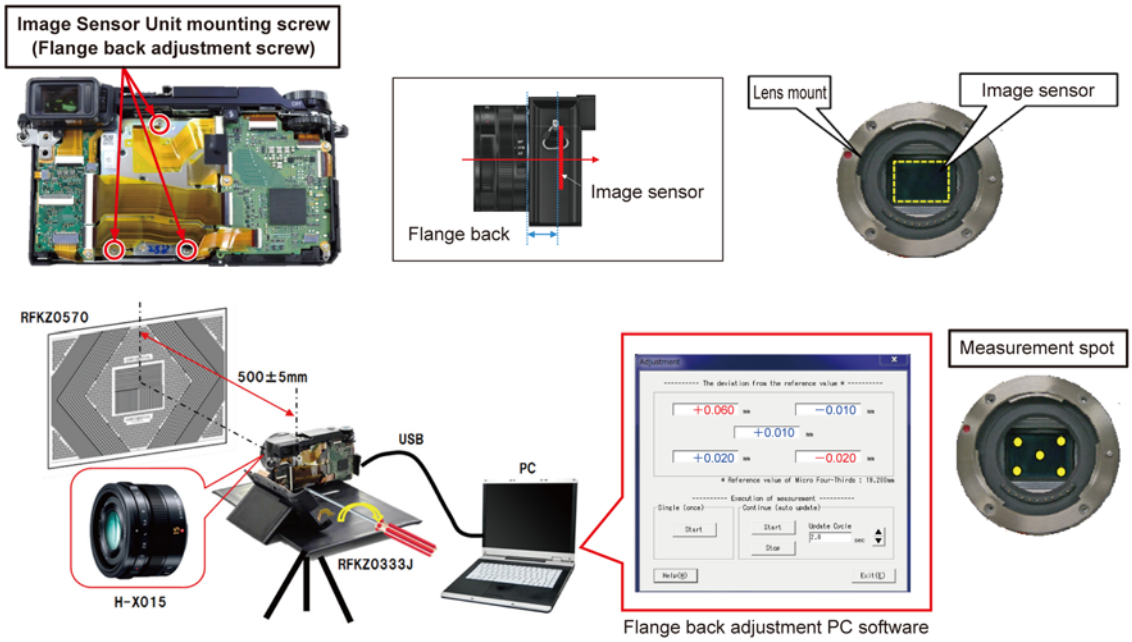

The image sensor of this camera cannot be fixed when power is OFF.
That is why, image sensor adjustment have to do power ON after assembly (only open the rear case).
Stand-alone mount part cannot adjust.

***3 NOTE: (When exchange the Shutter Unit)**

After replacing the shutter unit, the shutter unit data has to be stored to the Flash-ROM (IC6003) on the Main P.C.B..
The shutter unit supplied as service parts has affix the label of own configure data.
By inputting second line to fourth line of these data into the adjustment software and writing these data to Flash-ROM (IC6003), the shutter adjustment becomes needless.
In addition, the adjustment software can read data encoded to QR Code by using WEB camera with a close-up function.
After that, proceed the main body adjustment.
The details are refer to adjustment manual in adjustment software.

***4 NOTE: (When exchange the Main P.C.B. and/or Flash-ROM (IC6003))**

After exchanging the “Main P.C.B. and/or Flash-ROM”, first, execute “Initial Settings” to determine the model suffix, and then, cancel the “Initial Settings” and proceed the adjustments.
When the adjustment data is rewrite without “Initial Settings” execution, may not be able to choose desire model suffix.
During the “Initial Settings” (When the model suffix select screen is displayed), do not power off or do not remove the battery.
* Power down during “Initial Settings” may cause not be able to choose desire model suffix.

When cannot be repaired in the IC exchange, and in the case of performing the “Main P.C.B.” exchange, carry out any of following.

1. When it can turn on power, and the adjustment software can communicate with the camera body:
   Before replacing, proceed the Flash-ROM (IC6003) data backup from the unit.
   After replacing, overwrite the Flash-ROM (IC6003) data with backup data from the unit.
   After that, proceed the main body adjustment. (Almost adjustment/inspection items can be omitted.)
   Refer to the adjustment instruction in the adjustment software for details.
2. When it cannot turn on power, or the adjustment software cannot communicate with the camera body:
   Almost readjustment fully are necessary.
   The details are refer to adjustment manual in adjustment software.

***5 NOTE: (When White Balance (WBL/WBM) adjustment)**

After change to WB adjustment mode for service with software, the adjustment is executed.
After adjusting the AWB adjustment, to cancel the WB adjustment mode for service.
The details are refer to adjustment manual in adjustment software.

***6 NOTE: (About the G sensor adjustment)**

Offset adjustment for built in electronic level.
The details are refer to adjustment manual in adjustment software.

***7 NOTE: (About Gyro sensitive/DC offset adjustment)**

Gyro adjustment for BIS. Put to a normal state and execute automatic adjustment.
The details are refer to adjustment manual in adjustment software.

About the 3D interchangeable lens (H-FT012) correspondence

This unit has no special structure (circuit or part) for the 3D interchangeable lens correspondence, only by software is processed the 3D interchangeable lens correspondence.
Therefore, if taken with other lenses as usual, the 3D interchangeable lens is no problem for operation.

11 Maintenance

11.1. Notice in External Cleaning

11.1.1. About the Body

NOTE:

Before cleaning the camera, remove the battery and/or disconnect power plug from the outlet.
Also, remove the memory card and lens unit.

11.1.1.1. Dust/Dirt on the Outer Casing Part (S)

1. Blow off the dust first, then sweep out the dust from narrower spaces with soft cleaning brush.
2. Wipe up fingerprint and/or dirt on the Outer casing part with the dry fuzz-free cloth.

11.1.1.2. Dust/Dirt on the Image Sensor

1. Blow off the dust on the surface of the Image sensor with the Blower. (Refer to the following Figure.)
   - Keep the Mount Facing down condition towards to floor when cleaning.
   - Do not put the Blower further inside than the lens mount.
   - Be careful not to blow too strongly.
2. Wipe off the dirt on the image sensor surface with Lens Cleaning Kit (BK)(VFK1900BK).

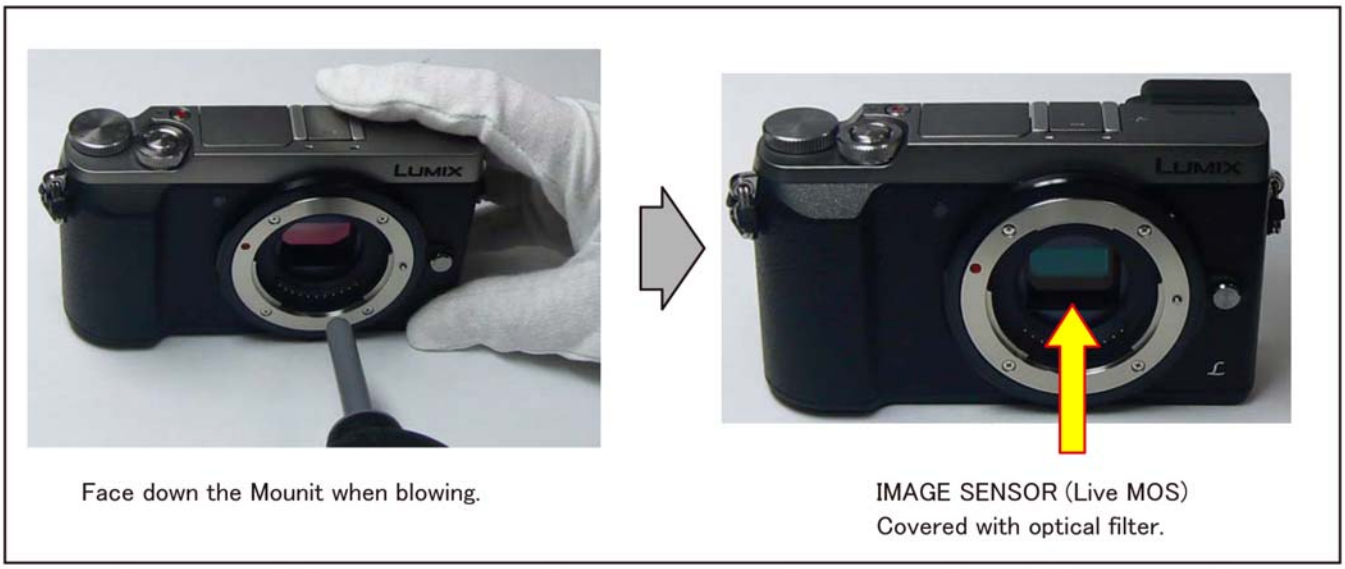

11.1.1.3. About the LVF Unit

[Procedures]

1. Refer to the “Disassembly & Assembly Instructions” and disassemble the LVF Unit.
2. Blow off the dust of LVF Lens Unit with a blower.
3. Wipe off the dirt on the surface of glasses with Lens Cleaning KIT (VFK1900BK), if necessary.

11.1.2. About the Lens

Please refer to the following service manuals about Maintenance of bundled lenses.

- H-FS12032PP/E/GK: Order No.DSC1311036CE
- H-FS35100PP/E/GK: Order No.DSC1410024CE
- H-H020APP/E/GK: Order No.DSC1307028CE
- H-FS14140PP/E/GK: Order No.DSC1305023CE/DSC1506509SE

12 Block Diagram

12.1. Overall Block Diagram

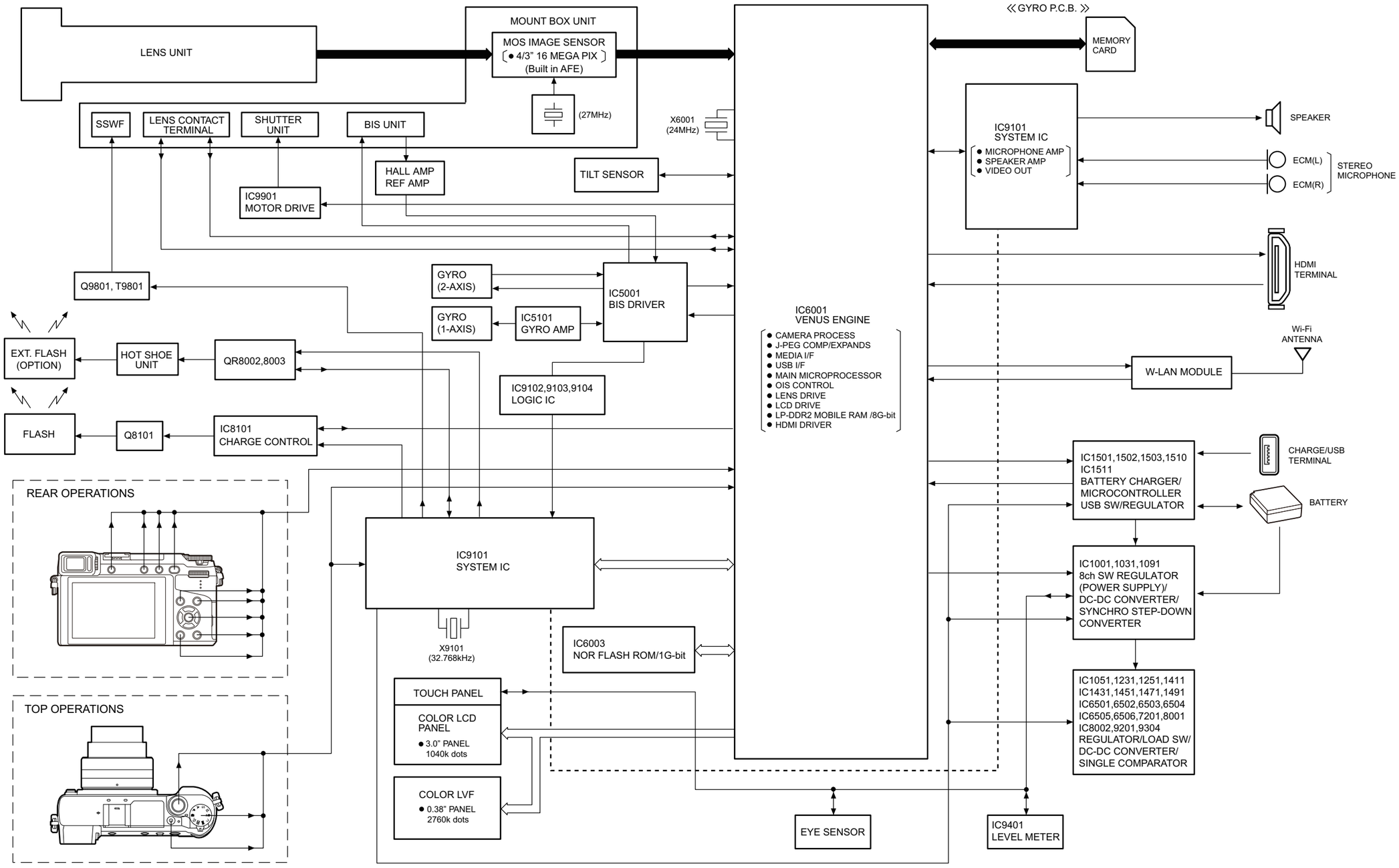

DMC-GX80/85 OVERALL BLOCK DIAGRAM

12.2. System Control Block Diagram

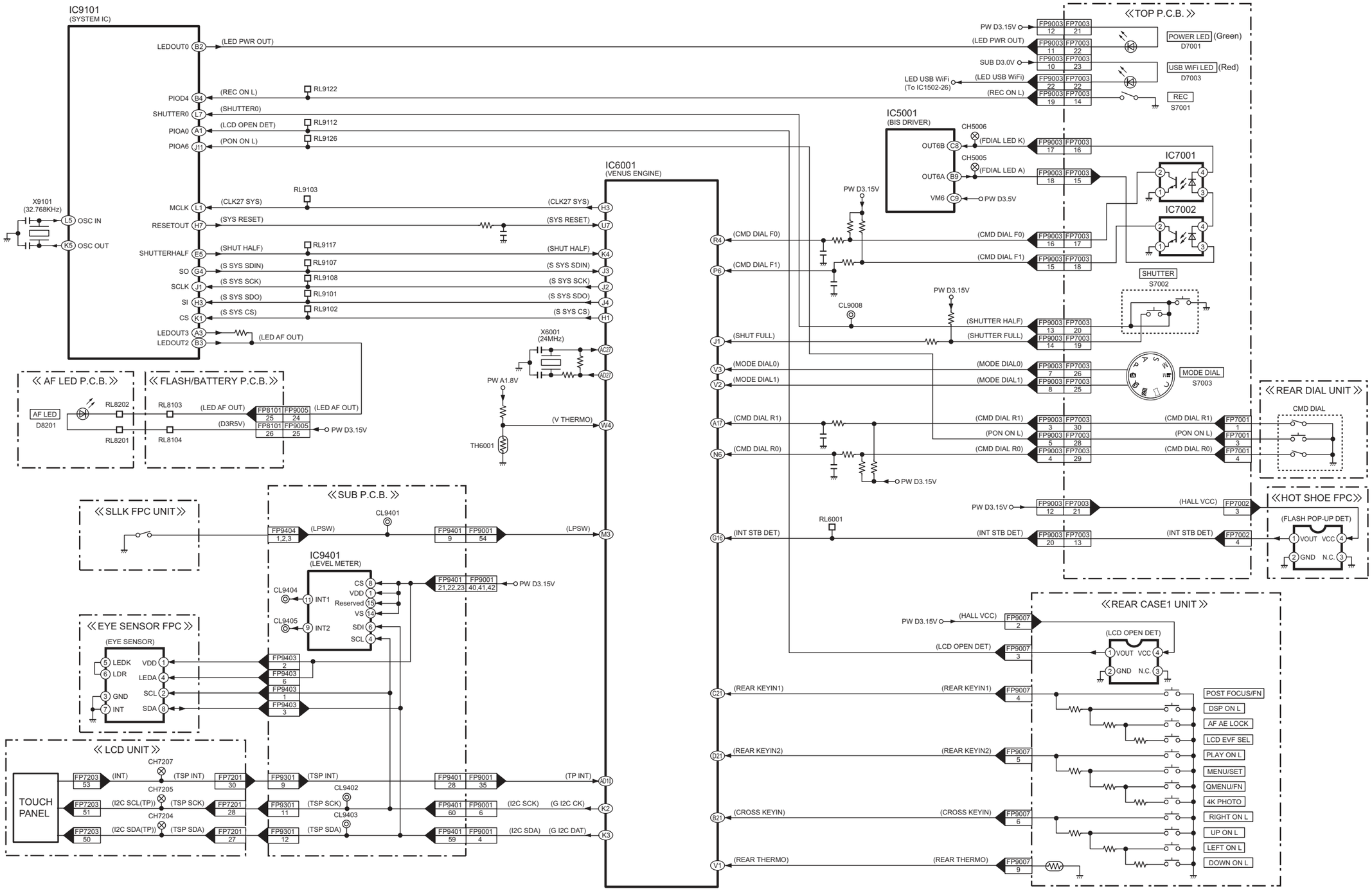

DMC-GX80/85 SYSTEM CONTROL BLOCK DIAGRAM

12.3. Video/Audio Process(1) Block Diagram

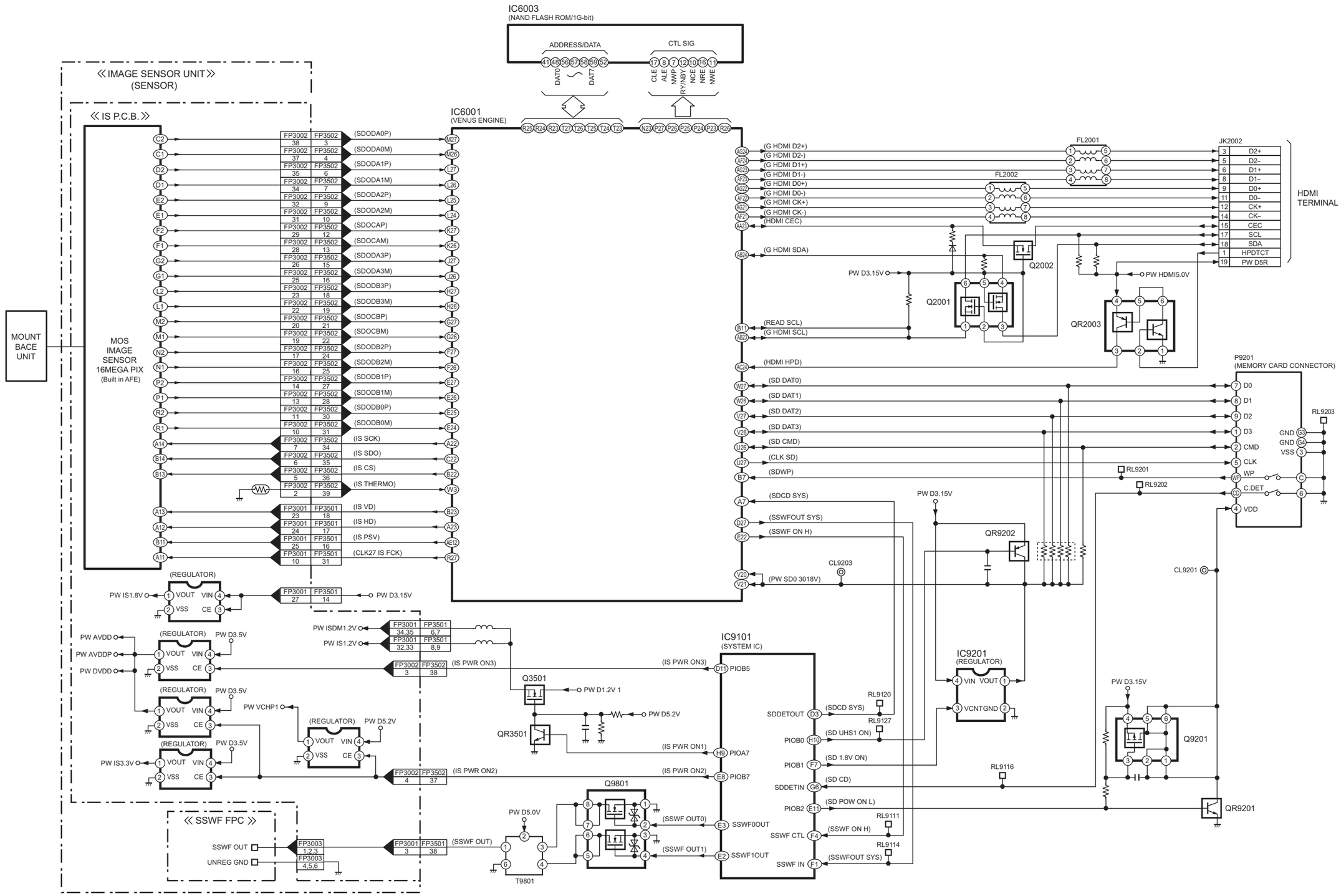

DMC-GX80/85 VIDEO/AUDIO PROCESS(1) BLOCK DIAGRAM

12.4. Video/Audio Process(2) Block Diagram

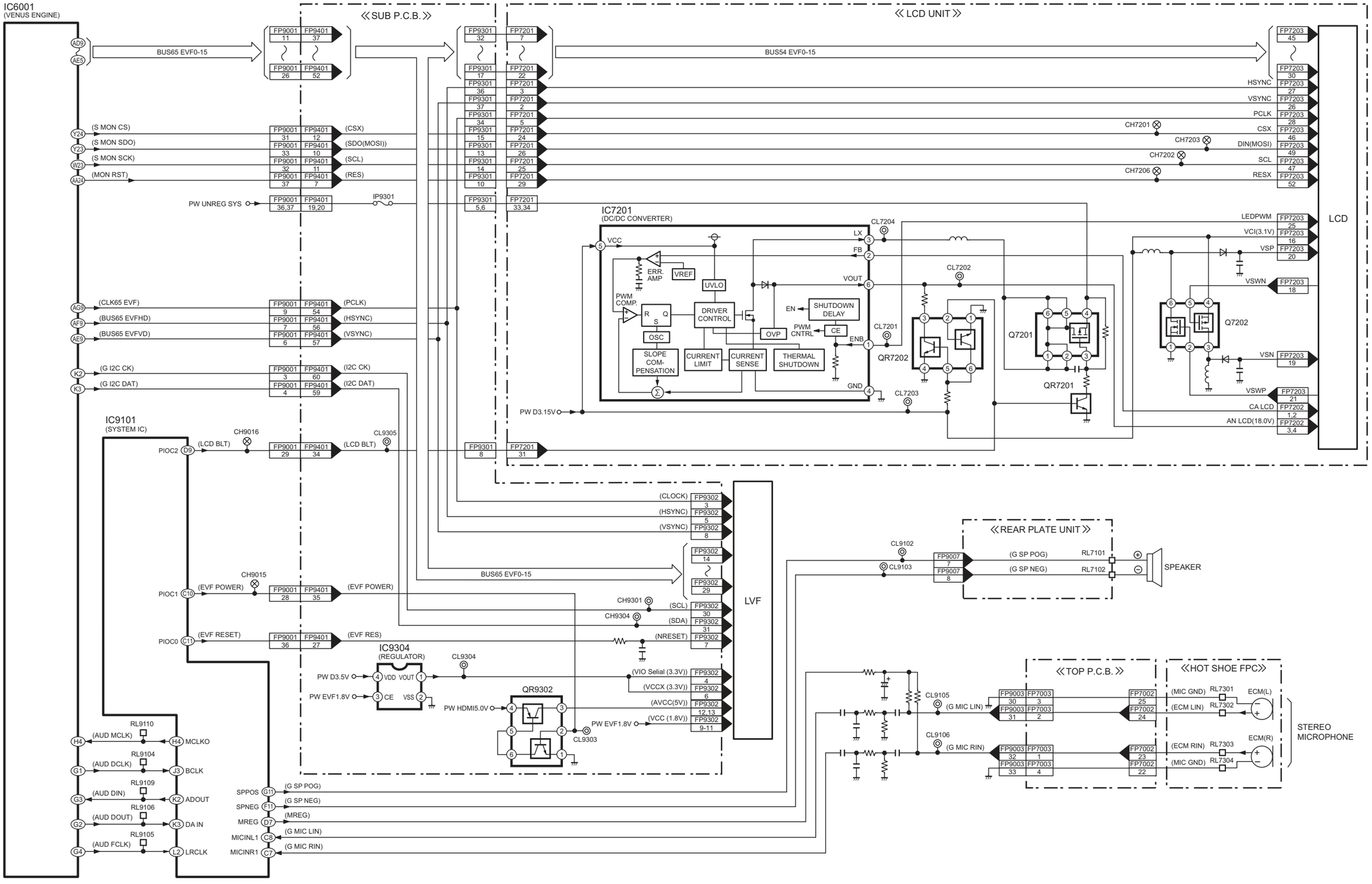

DMC-GX80/85 VIDEO/AUDIO PROCESS(2) BLOCK DIAGRAM

12.5. Gyro/WiFi Block Diagram

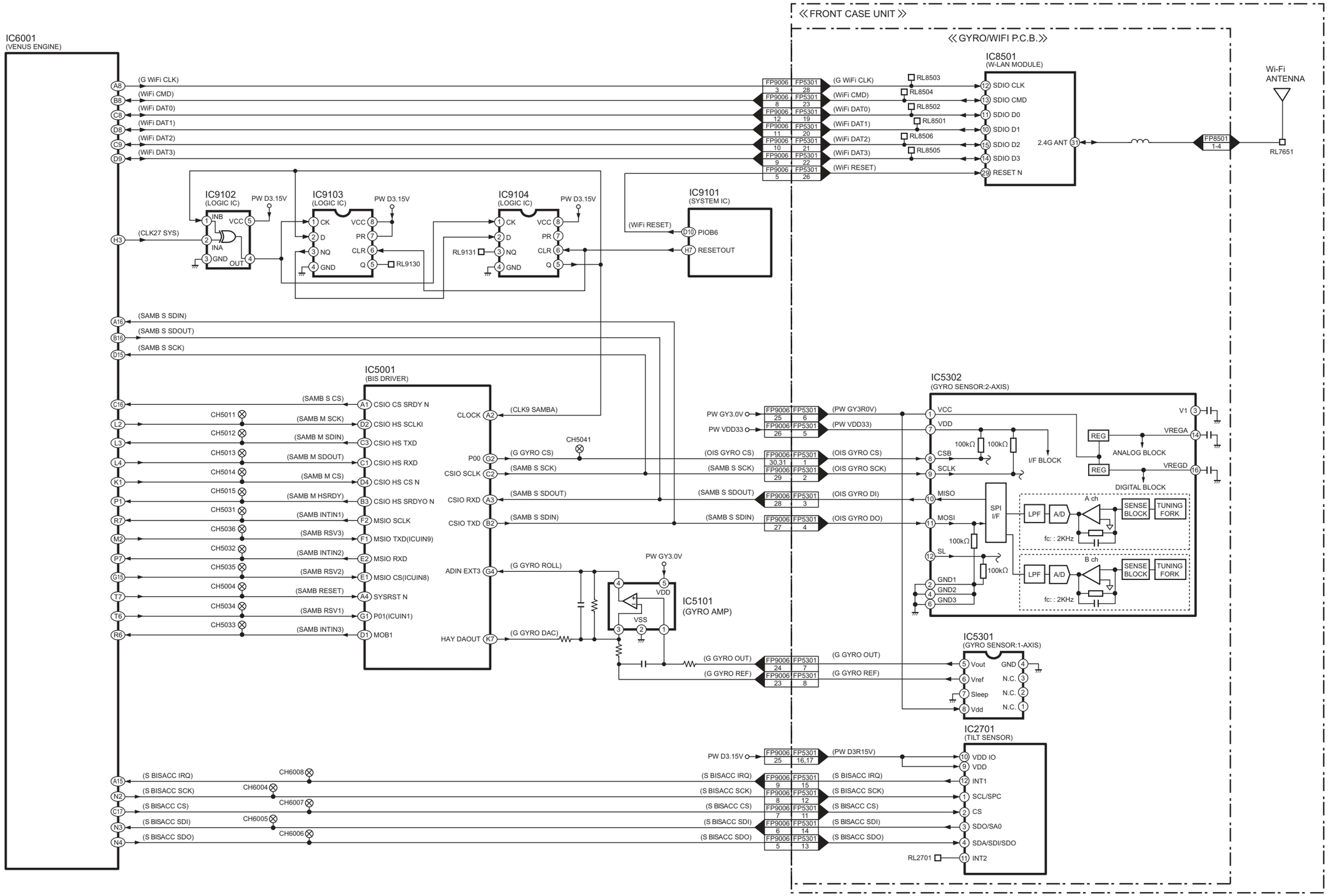

DMC-GX80/85 GYRO/WiFi BLOCK DIAGRAM

12.6. Flash/Hot Shoe Block Diagram

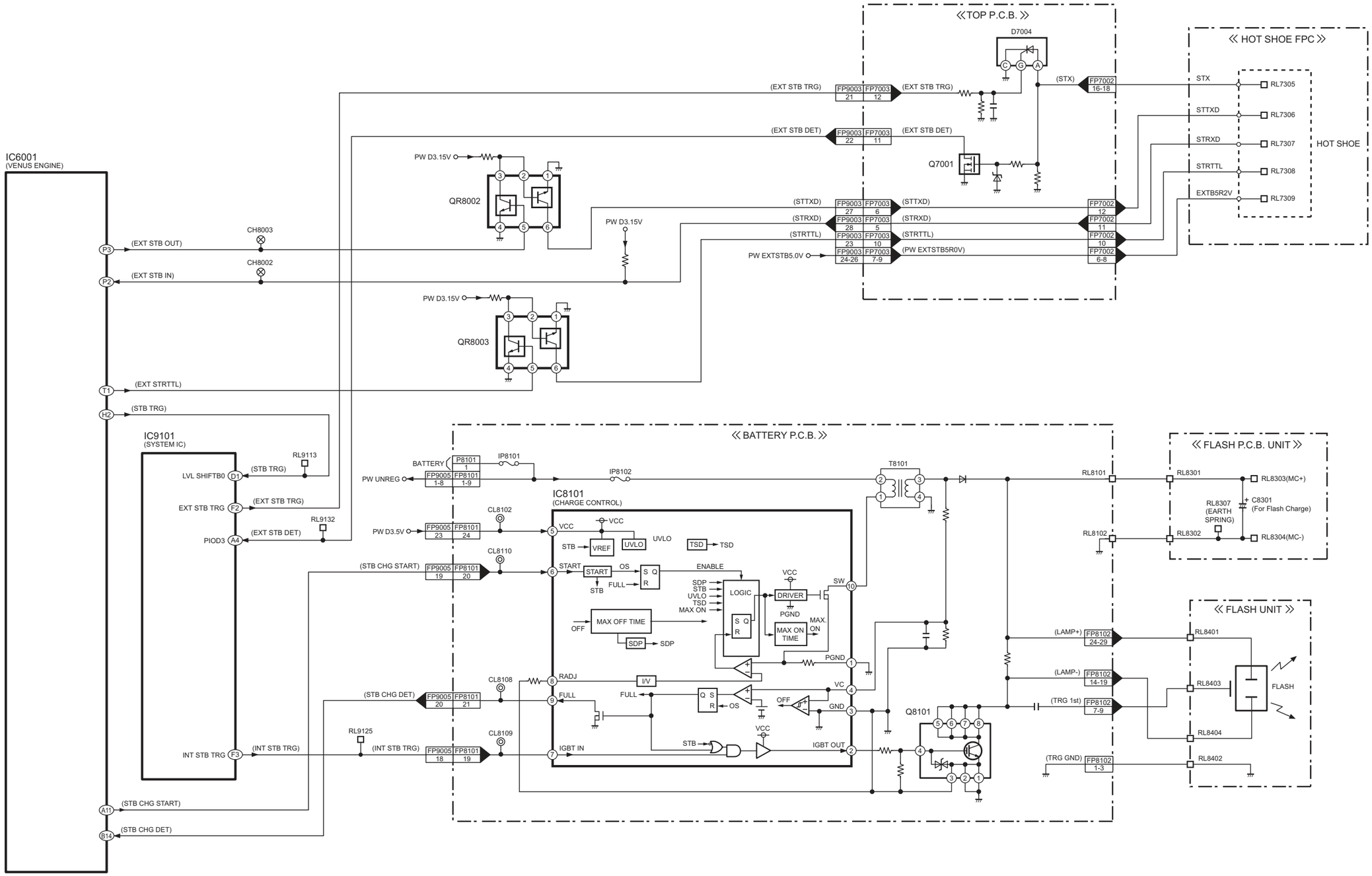

DMC-GX80/85 FLASH/HOT SHOE BLOCK DIAGRAM

12.7. Lens Block Diagram

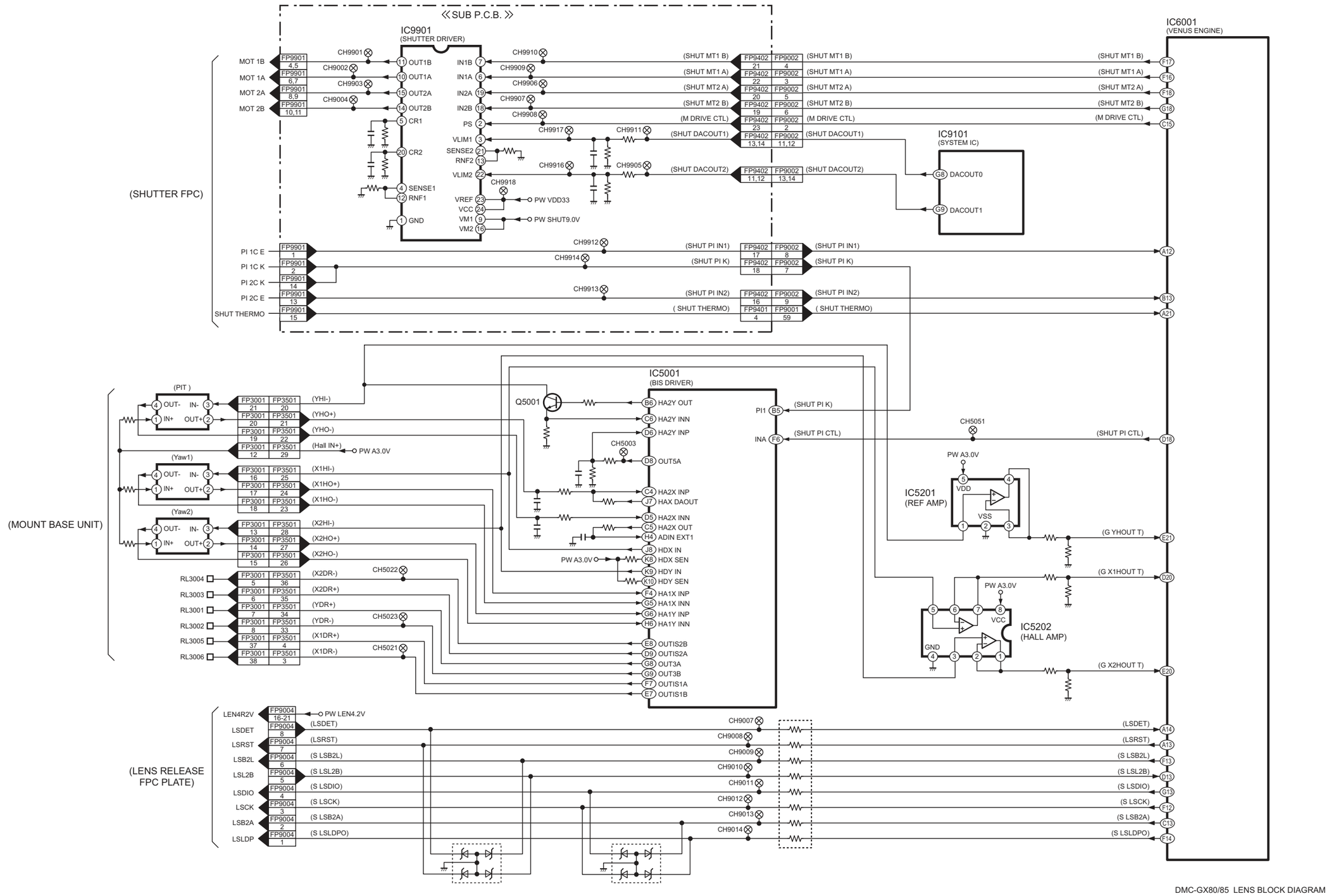

DMC-GX80/85 LENS BLOCK DIAGRAM

12.8. Power(1) Block Diagram

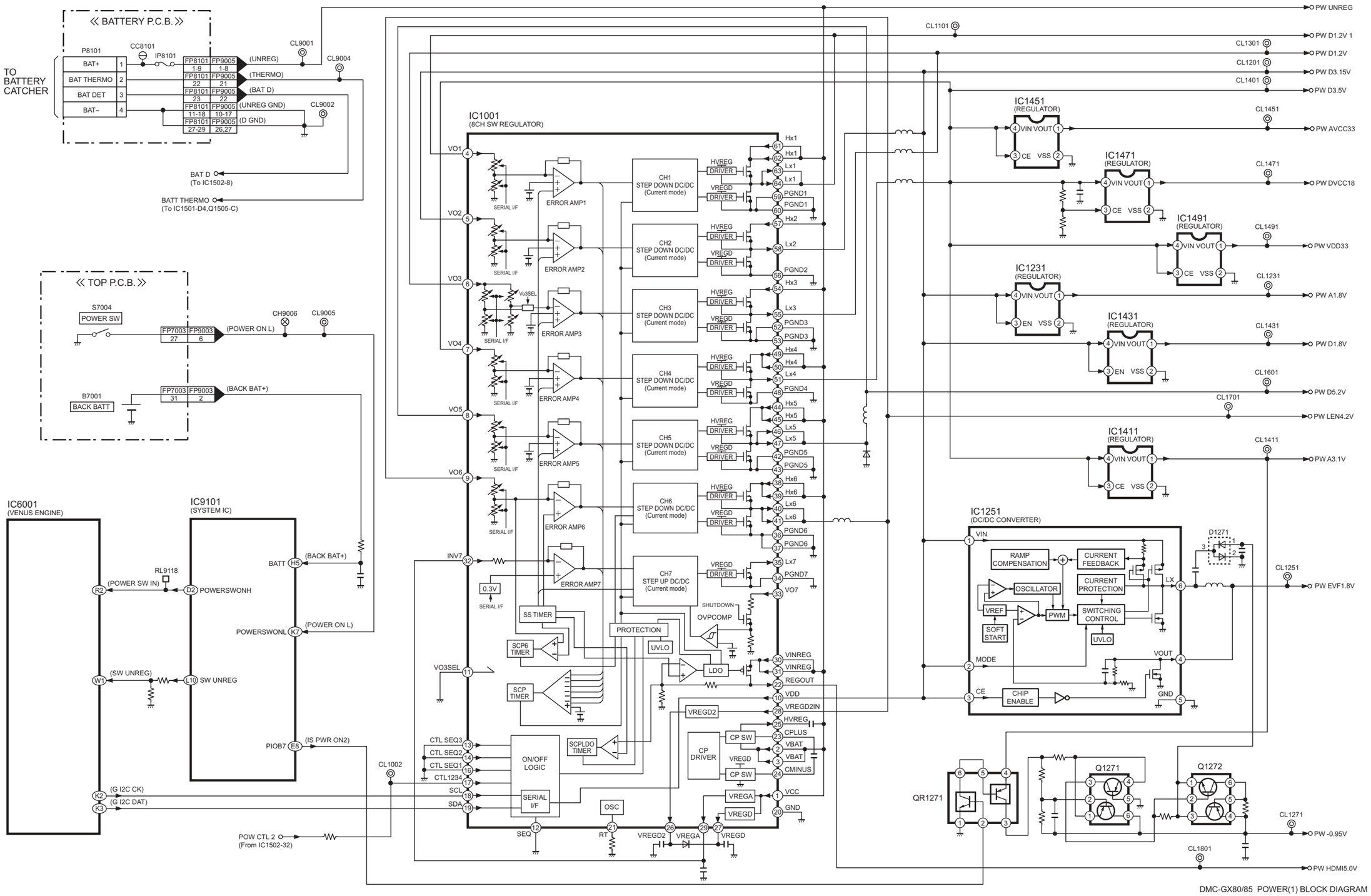

DMC-GX80/85 POWER(1) BLOCK DIAGRAM

12.9. Power(2) Block Diagram

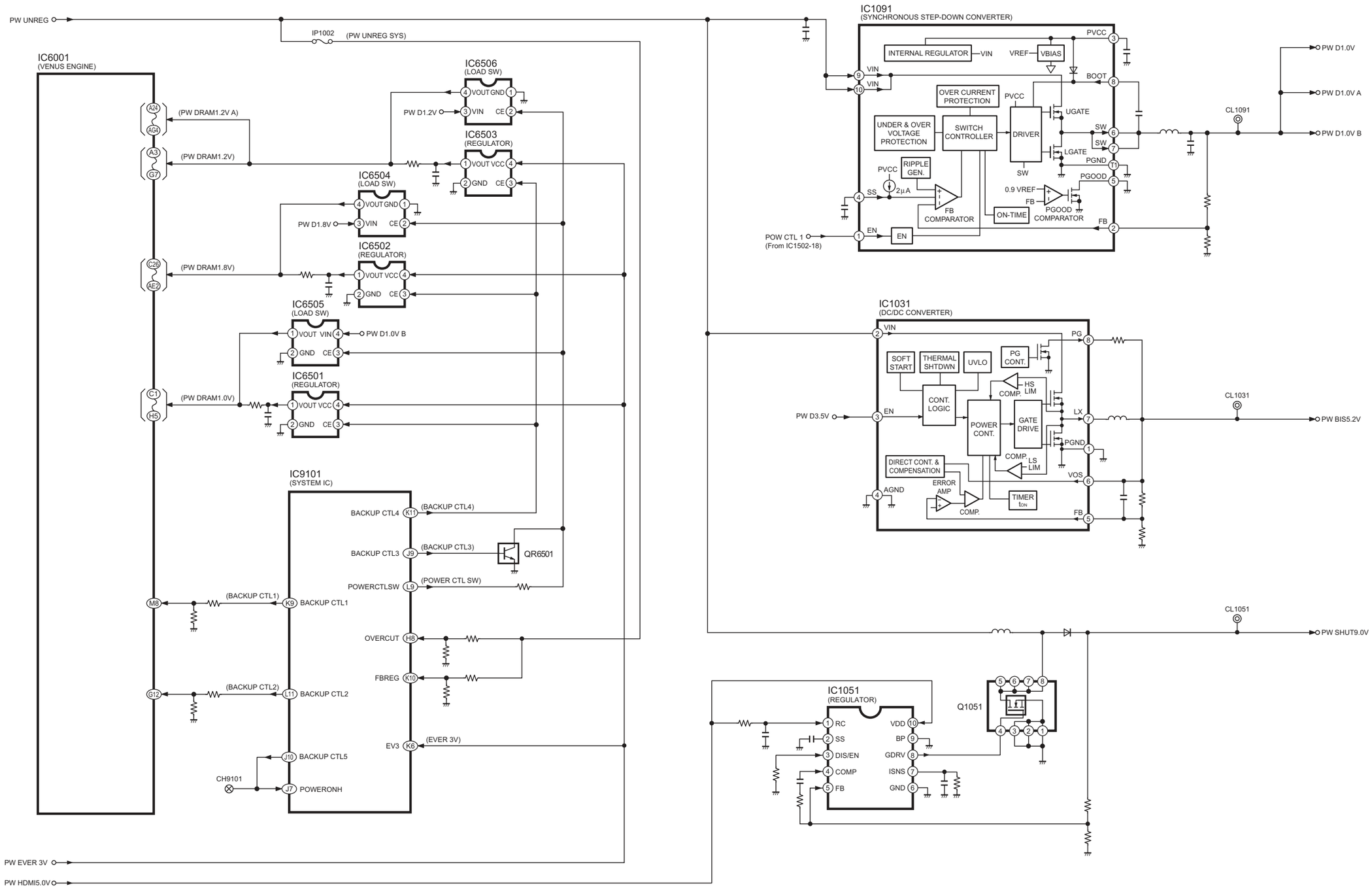

DMC-GX80/85 POWER(2) BLOCK DIAGRAM

12.10. Power(3) Block Diagram

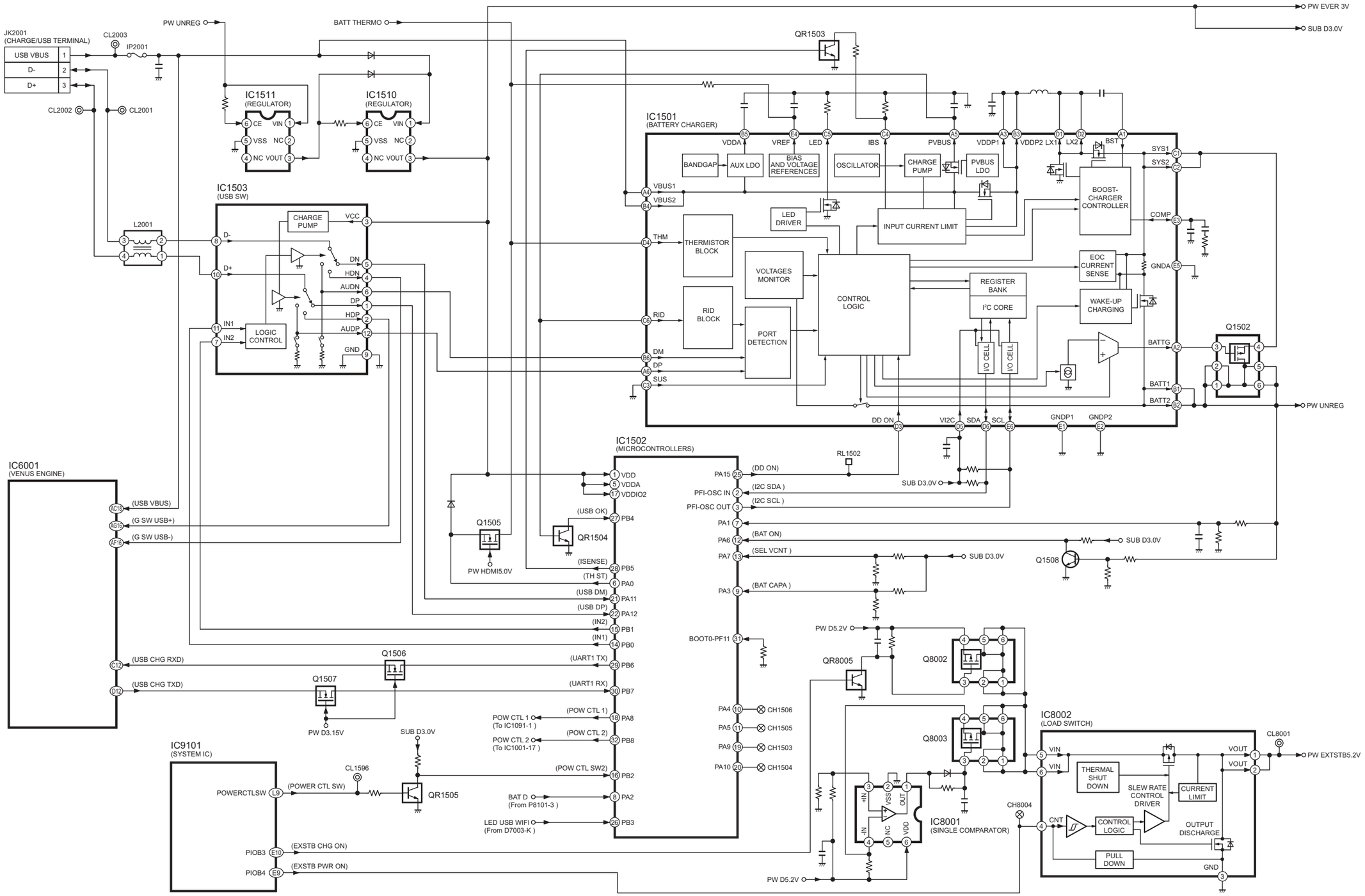

DMC-GX80/85 POWER(3) BLOCK DIAGRAM

13 Wiring Connection Diagram

13.1. Interconnection Diagram

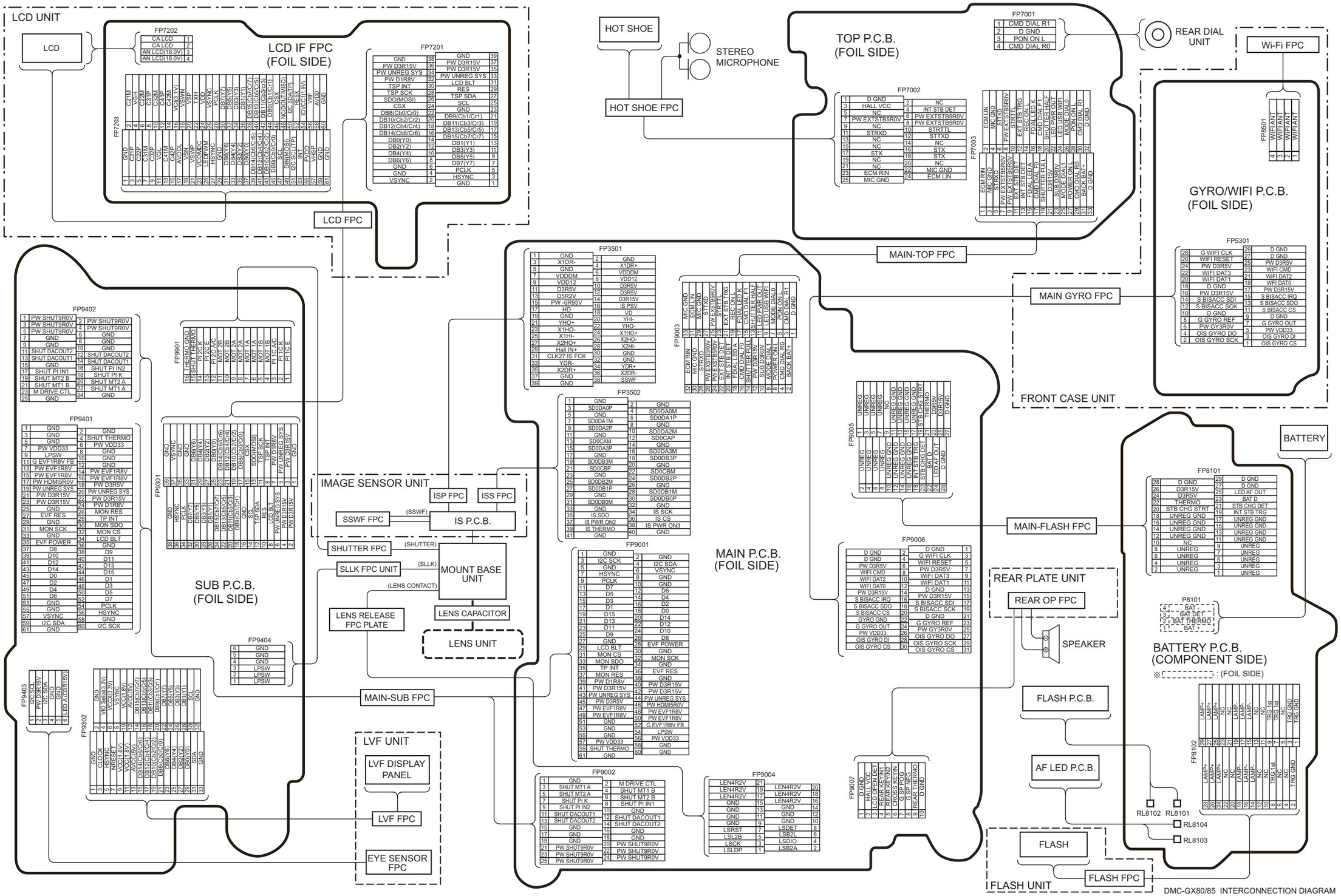

DMC-GX80/85 INTERCONNECTION DIAGRAM

14 Schematic Diagram

Please click the radio button for “Diagrams II / Parts List” on the menu bar in XML Service Manual.
If you want to print, please click the icon button for “Print” on the icon bar and select the item.

15 Printed Circuit Board

Please click the radio button for “Diagrams II / Parts List” on the menu bar in XML Service Manual.
If you want to print, please click the icon button for “Print” on the icon bar and select the item.

16 Exploded View and Replacement Parts List

Please click the radio button for “Diagrams II / Parts List” on the menu bar in XML Service Manual.
If you want to print, please click the icon button for “Print” on the icon bar and select the item.